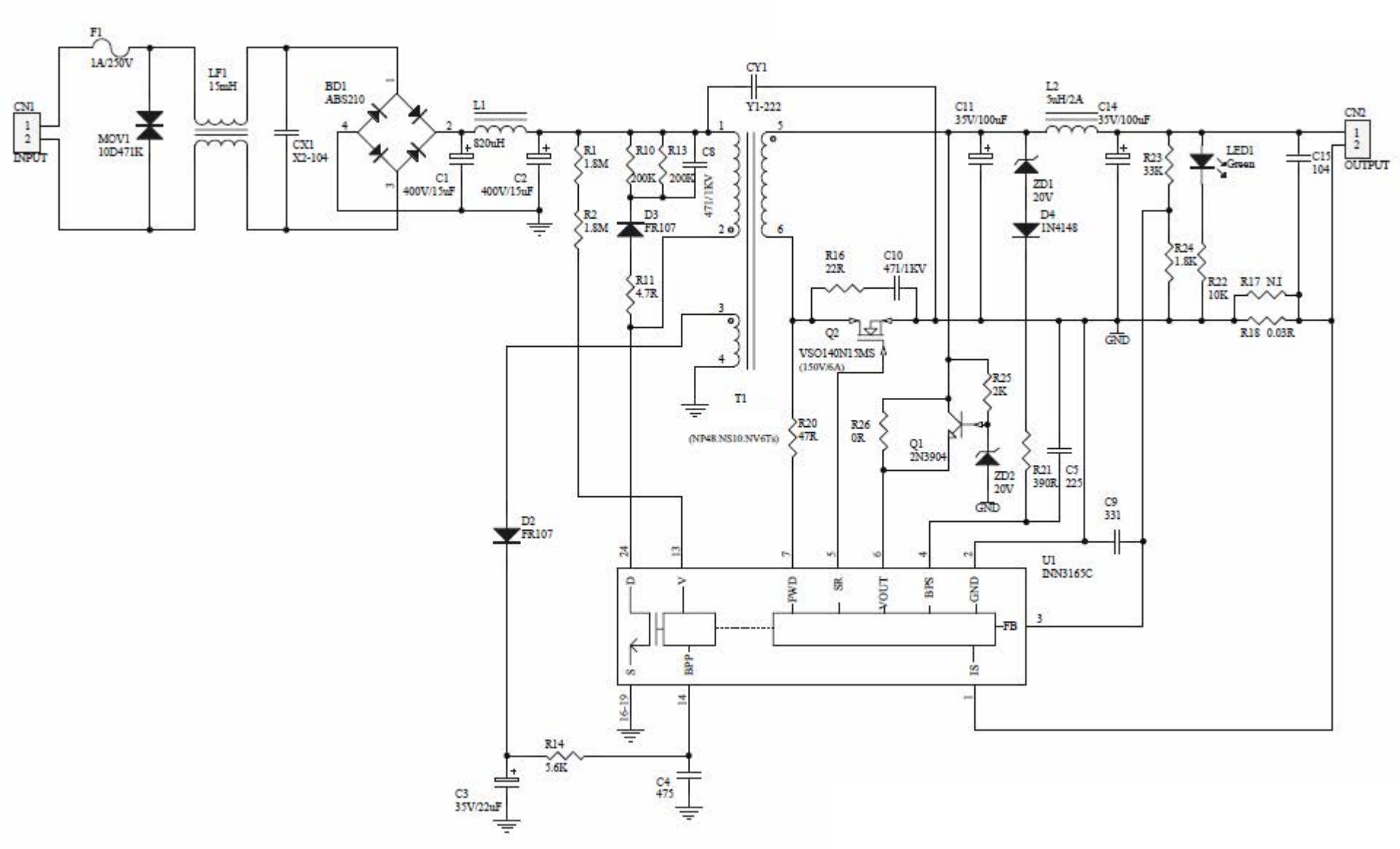
F1
1A/250V
CN1
INPUT
MOV1
10D471K
LF1
15mH
CX1
X2-104
BD1
ABS210
C1
400V/15uF
C2
400V/15uF
L1
820uH
R1
1.8M
R2
1.8M
R10
200K
R13
200K
C8
471/1KV
D3
FR107
R11
4.7R
CY1
Y1-222
T1
(NP48:NS10:NV6Ts)
R16
22R
C10
471/1KV
Q2
VSO140N15MS
(150V/6A)
R20
47R
R26
0R
R25
2K
Q1
2N3904
ZD2
20V
GND
R21
390R
C5
225
C9
331
C11
35V/100uF
ZD1
20V
D4
1N4148
L2
5uH/2A
C14
35V/100uF
R23
33K
LED1
Green
R24
1.8K
R22
10K
R17 N1
R18 0.03R
C15
104
CN2
OUTPUT
D2
FR107
U1
INN3165C
D
V
S
BPP
FWD
SR
VOUT
BPS
GND
FB
IS
R14
5.6K
C3
35V/22uF
C4
475