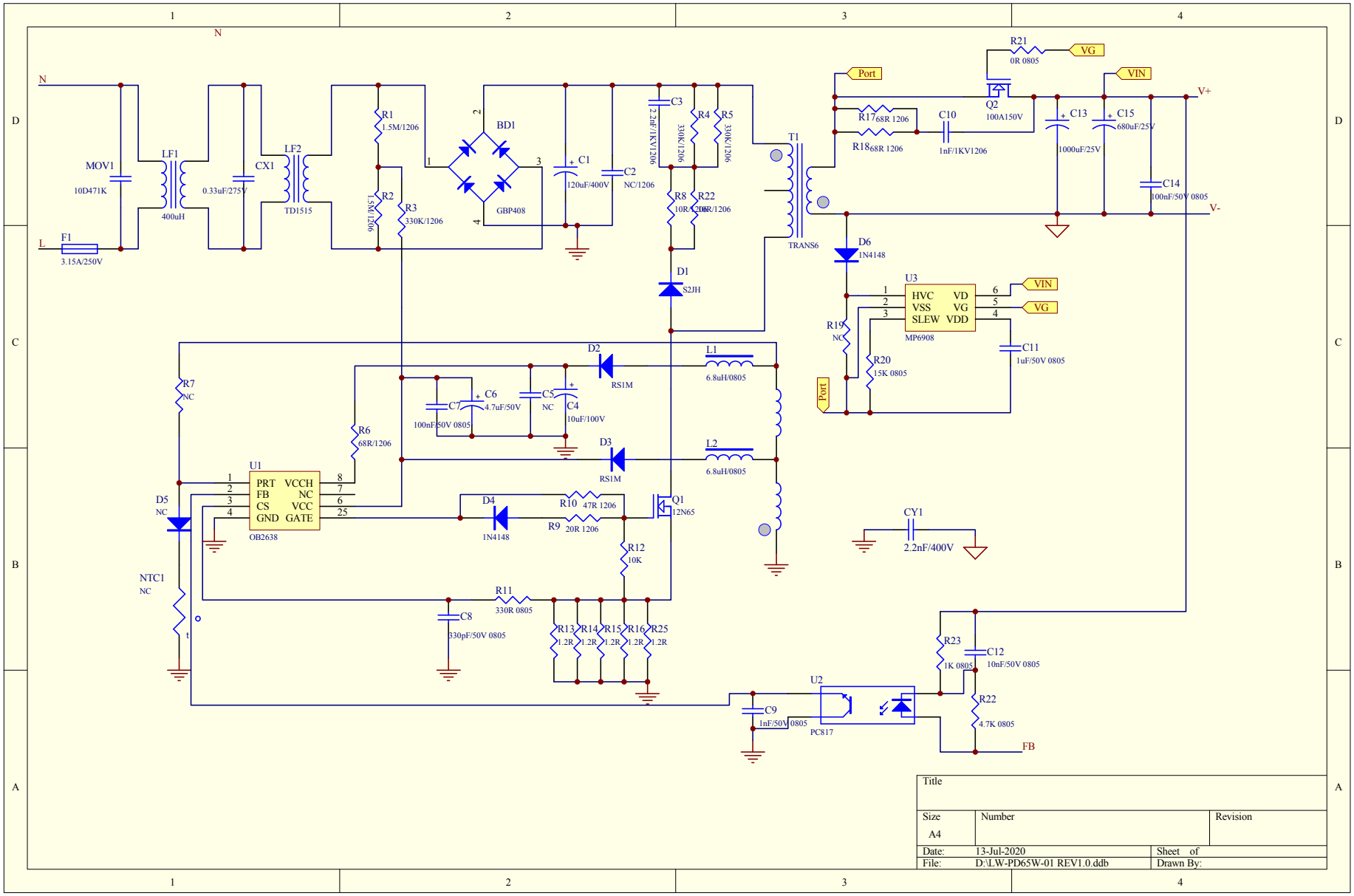

Title		
Size A4	Number	Revision
Date: 13-Jul-2020	Sheet of	
File: D:\LW-PD65W-01 REV1.0.ddb	Drawn By:	