48V2000W双全桥主板原理图

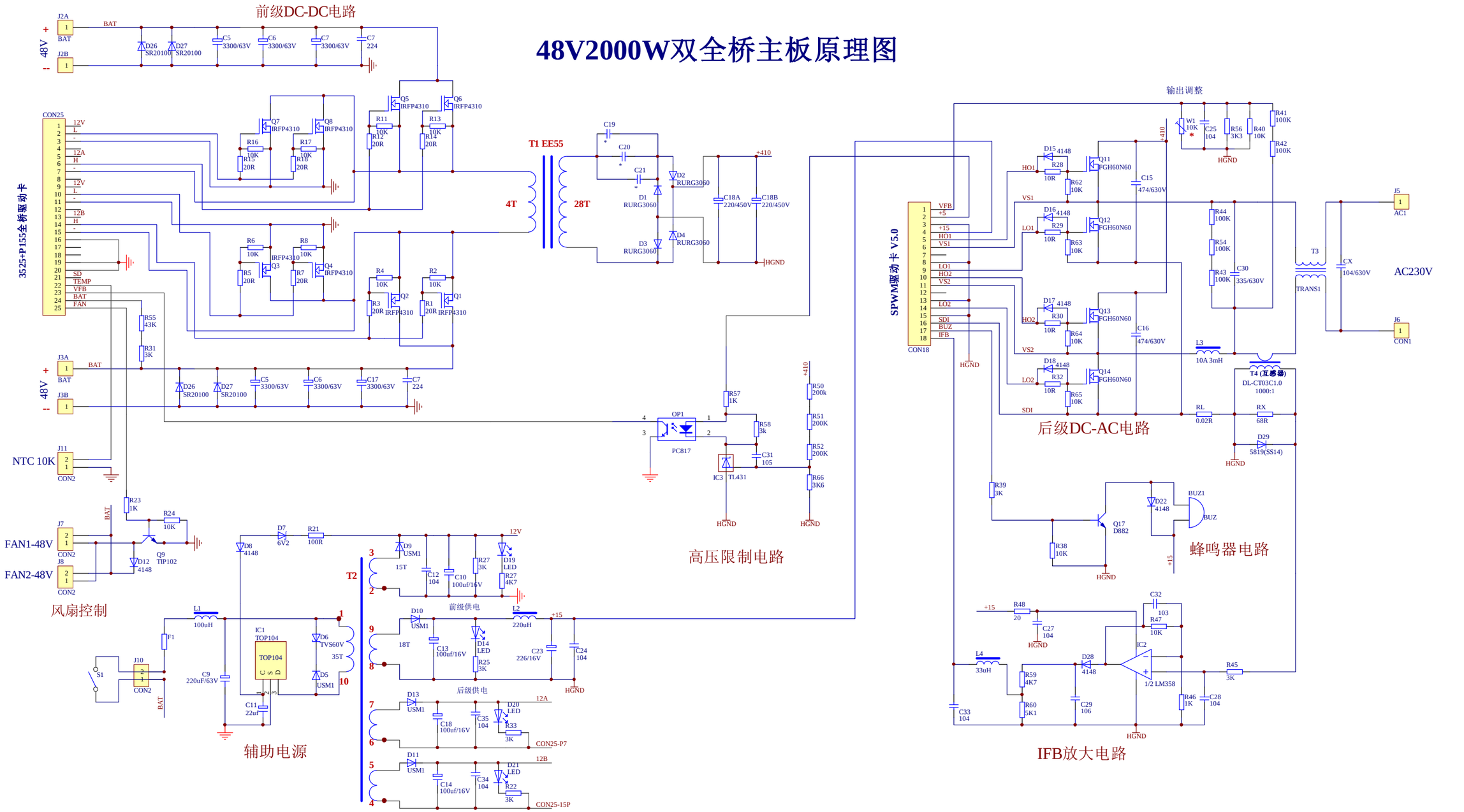

Title		
Size B	Number	Revision
Date: 16-May-2020	Sheet of	
File: C:\Documents and Settings\Administrator\Desktop\24V48V2000WAPR9019\24V48V2000W-2	Drawn By:	