General Description

QF7141 is a Synchronous Buck Controller with two current sense pins suitable for many multi-output applications. It is designed to allow for operating a wide supply voltage range from 6V to 40V. It has both high-side and low-side drivers allowing synchronous configuration using two external power-NMOS。This IC can operate in both Constant Current (CC) and Constant Voltage (CV) modes.

QF7141 operates as aBuckControllerproviding awiderange of outputs at Constant Voltage (CV) from 6V to 40V and the output current as high as 10A or above. It has a Constant Current (CC) mode so that output current can be set externally and at an accuracy of ±4%.

The current mode control and external compensation makes feedback control have good line and load regulation with flexible external design.

Features

- Vin: 6V to 40V, UVLO=5.5V±0.5V
- Vout: 3V to 28V; typical at 5V
- Precision CC/CV Mode Control
- Burst/PFM Mode for Increased Light Load Efficiency
- 2 outputs independent Constant Current setting
- Hiccup mode when output voltage below 50% normal output voltage
- Protection:
  NMOS peak current limit: accuracy：~20%
  Output short protection: reduce input current to less than 20mA (RMS)
  Output FB OVP (125% VFB), only turn off High side MOS.
  Temperature shutdown (OTP)
- Adjustable Output Cable Resistance Compensation
- Duty: 0~98% (T_{off}_min=100ns, Dead-time=25~35ns)
- Switching Frequency: 125k±25k
- Integrated MOSFET Drivers
- QFN12L Package

Pin Configurations

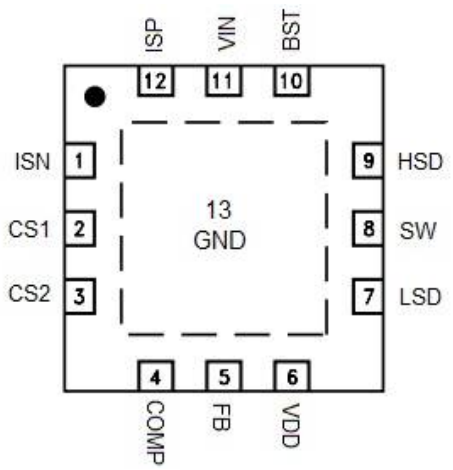

Figure1 Pin Configuration of QF7141(TopView)

Applications

- Car Charger
- High-Brightness Lighting
- General-Purpose DC/DC Controller

Pin Description

Pin Number	Pin Name	Description
1	ISN	Input Current Sense.
2	CS1	Current sense of the 1st output.
3	CS2	Current sense of the 2nd output.
4	COMP	Error Amplifier Output. The Converter stability compensation network is placed.
5	FB	Feedback input with reference to 1.20V. It can set output voltage.
6	VDD	Internal 5v power supply, a 1uF (or more) capacitor is connected between this pin and GND.
7	LSD	Low Side Driver
8	SW	Inductor terminal.
9	HSD	High Side Driver
10	BST	Internal High Side Driver Power Bias which is typically 5V above Vin. A typical 0.1uF capacitor is used connecting between BST and SW pins.
11	VIN	Supply input
12	ISP	Input Current Sense.
13	GND	Ground pin.

Function Block

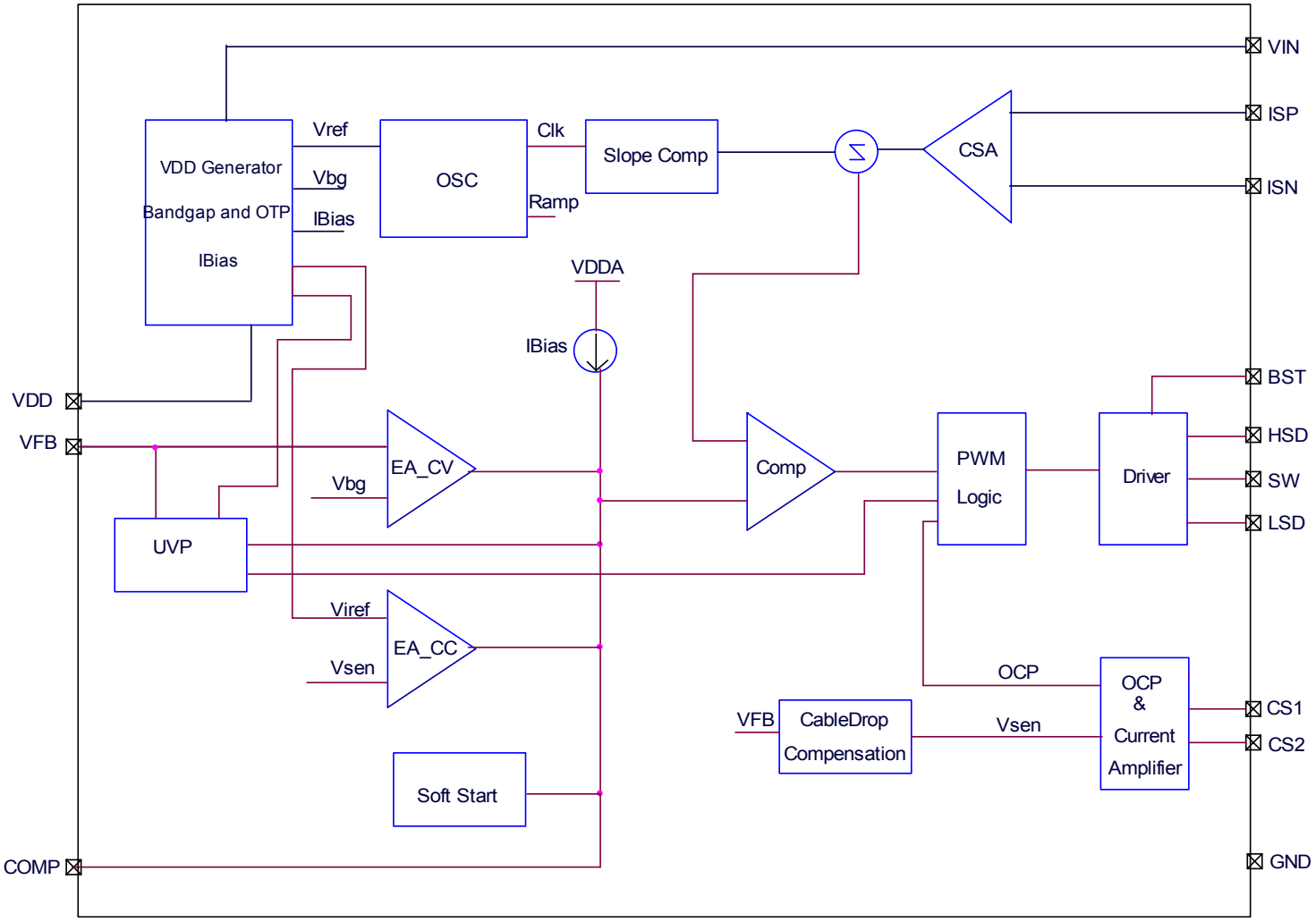

Figure 2 Function Block Diagram of 1&χρ41

Absolute Maximum Ratings

Symbol	Parameter	Rating	Unit
VIN	Supply Input Voltage	-0.3 to +43	V
	ISP,ISN to VIN	-0.3 to +0.3	V
	BST to SW	-0.3 to +6	V
	SW to GND	-0.3 to VIN+0.6	V
	BST,HSD to GND	VSW-0.3 to VSW+6	V
	VDD,VFB,ISET,COMP,LSD,CS1-2 to GND	-0.3 to +6	V

ESD	HBM (Human Body Mode)	2K	V
θ_{JA}	Thermal Resistance from Junction to ambient	40	°C/W

Recommended Operating Conditions

Symbol	Parameter	Rating			Unit
		Min.	Typ.	Max.	
VIN	Supply Voltage	6*	-	40	V
V_{OUT}	Output voltage range	3	-	28	V
I_{OUT}	Output current range	-	-	15	A
T_{OP}	Operating Temperature	-40	-	85	°C
T_{STG}	Storage Temperature Range	-65	-	150	°C
TJ	Junction Temperature	-40	-	150	°C
T_{SDR}	Maximum Lead Soldering Temperature, 10 Seconds	260			°C

Note: * when supply voltage is around 6V, output load current should be less than 5A.

Electrical Characteristics

(VIN=12V, T_A=25°C (unless otherwise specified).

Symbol	Characteristic	Test conditions	Min	Typ	Max	Unit
VIN	Supply Voltage		6.0	-	40	V
I_{IN}	Supply Input Current	Vout=5V,No load	1	1.7	3.5	mA
VIN UVLO						
V_{UP}	VIN UVLO Turn ON	VIN Rising	5.7	6.0	7.1	V
V_{HYS}	VIN UVLO Hysteresis	VIN Falling	-	0.6	-	V
Feedback voltage						
V_{FB}	Feedback voltage		1.176	1.20	1.224	V
	Tolerance		-2	-	2	%
Soft Start						
	Soft Start time		-	6	-	ms
Oscillator						
F_{SW}	Switch frequency		100	125	150	KHz
T_{ON}	Minimum On-Time		-	100	-	ns
D	Duty cycle		-	-	98	%
Current sense						
V_{THCC}	CC threshold		65	68	71	mV
I_{FB}	Cable compensation Current	CS1-2=68mv	-	2	-	uA
HDR & LDR Drivers						

T_{RH}	HDR Rising Time		-	30	-	ns
T_{FH}	HDR Falling Time		-	20	-	ns
T_{RL}	LDR Rising Time		-	30	-	ns
T_{FL}	LDR Falling Time		-	20	-	ns
T_{LH}	Dead Time		-	30	-	ns
T_{HL}	Dead Time		-	30	-	ns
Thermal Shutdown(OTP)						
T_{SD}	Temperature Rising		-	150	-	^{o}C
T_{HYS}	OTP Hysteresis		-	20	-	^{o}C

技术支持/QQ：2369436284

Typical Application Circuit

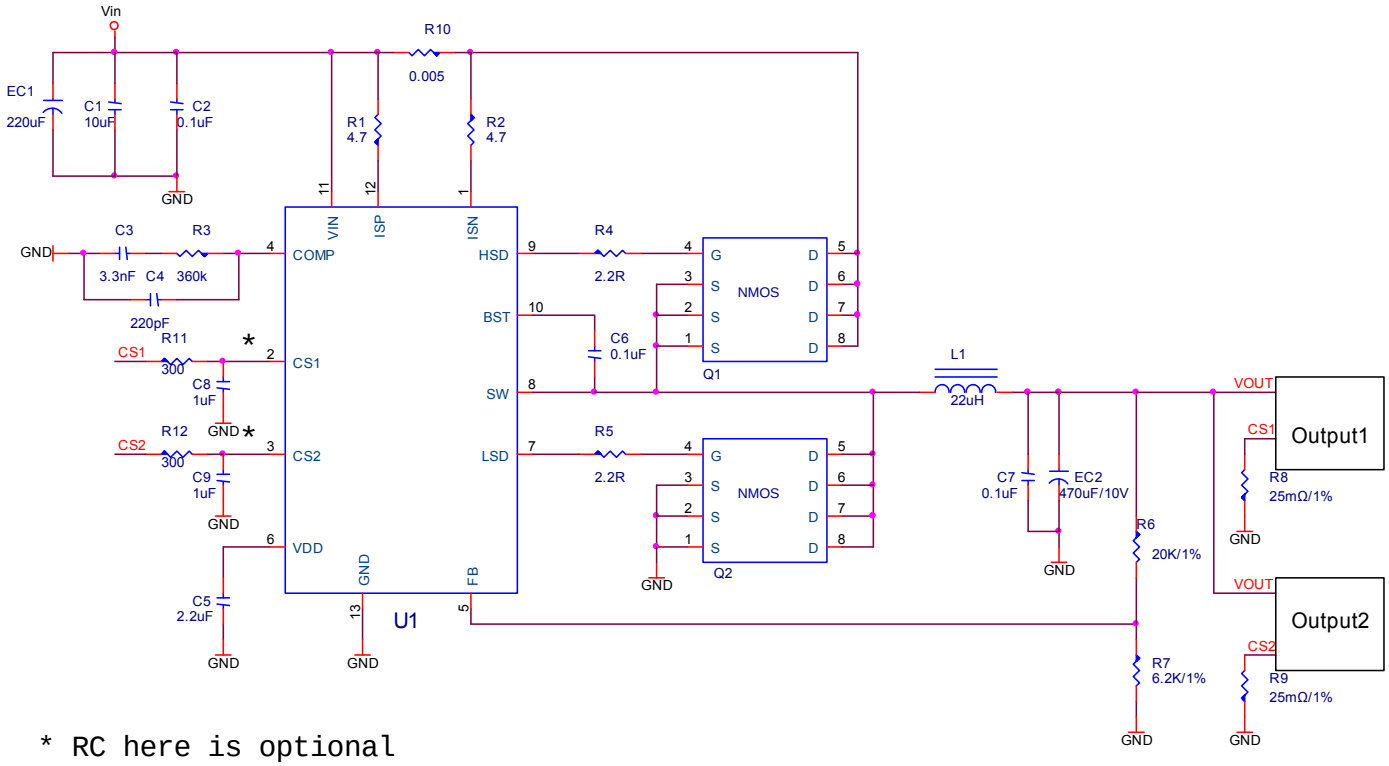

* RC here is optional

Figure 3 2-outputs with CC(CS1 and CS2)

Function Description

QF7141 operates in a peak-current–mode control to regulate the output voltage. The internal clock initiates the PWM cycle, which turns on the integrated high side power MOSFET. The high-side MOSFET remains on until its current reaches the value set by the COMP voltage. When the power switch is off, it remains off until the next clock cycle begins.

CC/CV Mode Control

QF7141 provides CC/CVfunction. The Constant output Current control Mode and Constant output Voltage control Mode.

Output Voltage Setting

VFB is the feedback pin and connected to the non-inverting of error amplifier input. The output voltage is adjustable from 1.2V to 28V with a resistor-divider connected with VFB GND and converter's output. Using 1% or better resistors for the resistor-divider is recommended.

The output voltage is determined by the equation:

$V_{OUT}=V_{FB}*(1+R1/R2)=1.2V*(1+R1/R2)$

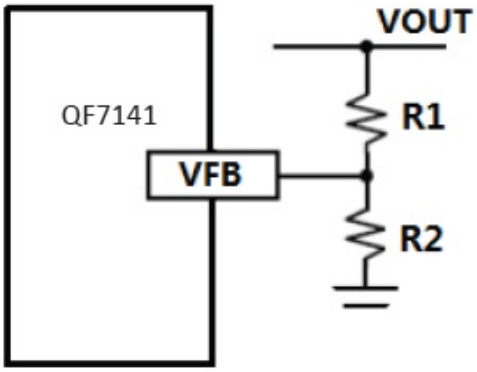

R1 can program the cable compensation.

FB OVP

If FB>125%*1.2V, the controller turn off the high side PWR MOS immediately.

FB UVP

For QF7141,HiccupModeofUnder VoltageProtection(UVP) is provided. If cc mode is triggered or over current protection(OCP)/short current protection(SCP) occur, the output voltage will be pulled down quickly. When FB<50%*V_{FB}, the controller will enter hiccup mode by disabling the converter and restarts soft-start after a predefined interval about 4s until the under voltage condition is removed.

FB Fast response

If FB>105%*1.2V or FB<95%, the controller turn off or turn on the high side PWR MOS immediately. This design reduce the overshoot and undershoot when load change suddenly

Soft start

The controller integrates a soft start circuit. The soft time is 10ms roughly.

Constant Current setting

The voltage of CS1 or CS2 pins reaches the voltage on V_{THCC}(68mV), the system will enter CC mode, the CC current can be calculated by followings:

$I_{CC} = V_{THCC} /(R_{CS1}$ or $R_{CS2})$

Here R_{CS1}, R_{CS2} are the sense resistors between CS1,CS2 and GND.

Output Cable Resistance Compensation

To compensate for resistive voltage drop across the charger's output cable, the controller integrates a simple, user-programmable cable voltage drop compensation using the impedance at the FB pin. By choosing different R1, we can get different cable voltage drop compensation values.

Vcdc= (Vcs1 or Vcs2)*R1 / 34000 (Vcs1 or Vcs2 >8mv)

Over Temperature Protection (OTP)

QF7141 provides over temperature protection (OTP). The OTP will shut down the converter when junction temperature exceeds 150°C. Once the junction temperature cools down by approximately 30°C, the controller will resume.

Output Inductor Selection

The inductor value (L) determines the inductor ripple current, IRIPPLE and affects the load transient response. Higher inductor value reduces the inductor's ripple current and induces lower output ripple voltage. The ripple current and ripple voltage can be approximated by:

$L=V_{OUT}*(V_{IN}-V_{OUT})/F_{SW}*I_{RIPPLE}*V_{IN}$

Where

F_{SW} : the switching frequency of the regulator;

V_{IN}/V_{OUT} : input voltage/output voltage;

I_{RIPPLE} is the inductor ripple current and $I_{RIPPLE}=(0.3\text{-}0.5)I_{OUT}$

Input Capacitor

A low ESR capacitor is highly recommended. Since large current flows in and out of this capacitor during switching, its ESR also affects efficiency.

The input capacitance should be higher than 100µF. The best choice is the ceramic type, however, low ESR tantalum or electrolytic types may also be used. The input capacitor should be placed close to the VIN and GND pins of the IC, with the shortest traces possible. In the case of tantalum or electrolytic types, they can be further away if a small parallel 1µF ceramic capacitor is placed right next to the IC.

Output Capacitor

The system requires the output capacitor to maintain the dc output voltage. The characteristics of the output capacitor affect the stability of the regulatory system. A low ESR electrolytic capacitor is recommended for a low output ripple and good control loop stability. For general applications, a 1µF ceramic capacitor and a 330µF (or more) polymer/electrolytic capacitor are recommended.

Package Information

QFN12L Package Outline Dimensions

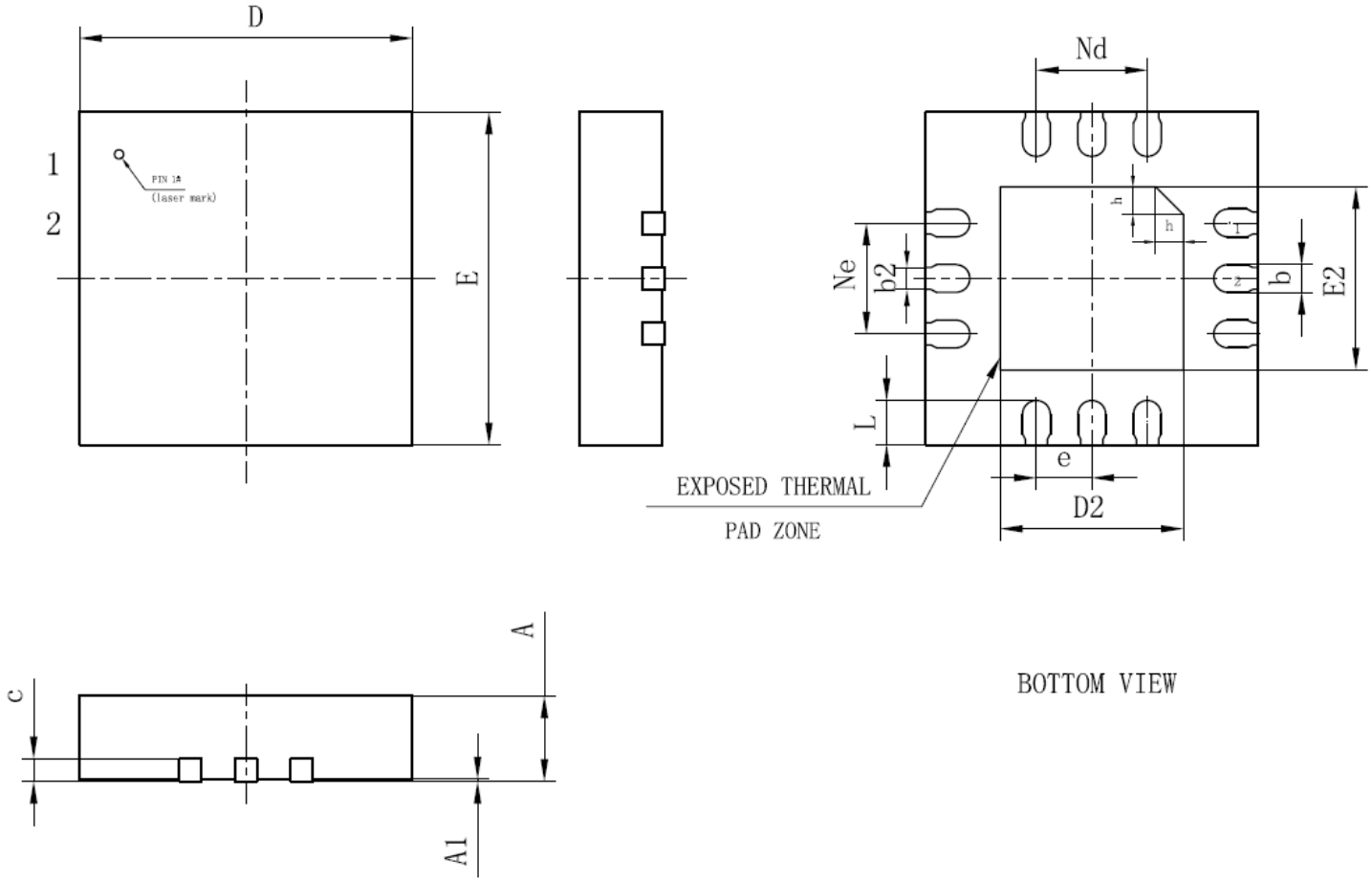

Symbol		A	A1	b	b2	c	D	D2	e	Ne	Nd	E	E2	L	h
Milli meter	MIN	0.70	-	0.18	0.15	0.18	2.90	1.55	0.50 BSC	1.00 BSC	1.00 BSC	2.90	1.55	0.35	0.20
	NOM	0.75	0.02	0.25	0.2	0.20	3.00	1.65				3.00	1.65	0.40	0.25
	MAX	0.80	0.05	0.30	0.25	0.25	3.10	1.75				3.10	1.75	0.45	0.30