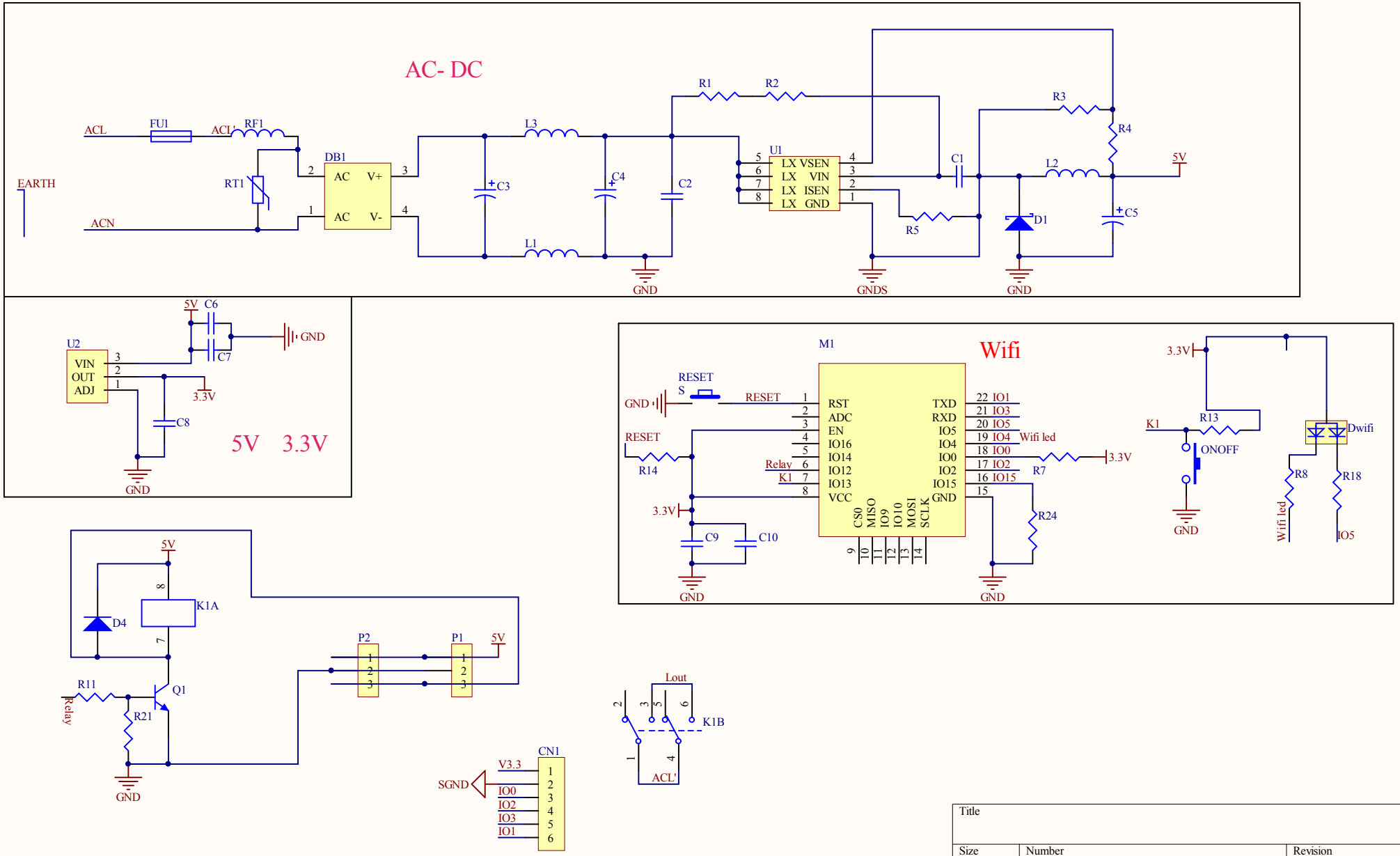

Title		
Size A4	Number	Revision
Date: 2018/11/21	Sheet of	
File: E:\Apply Of AD10\..\Qc-relay .SchDoc	Drawn By:	