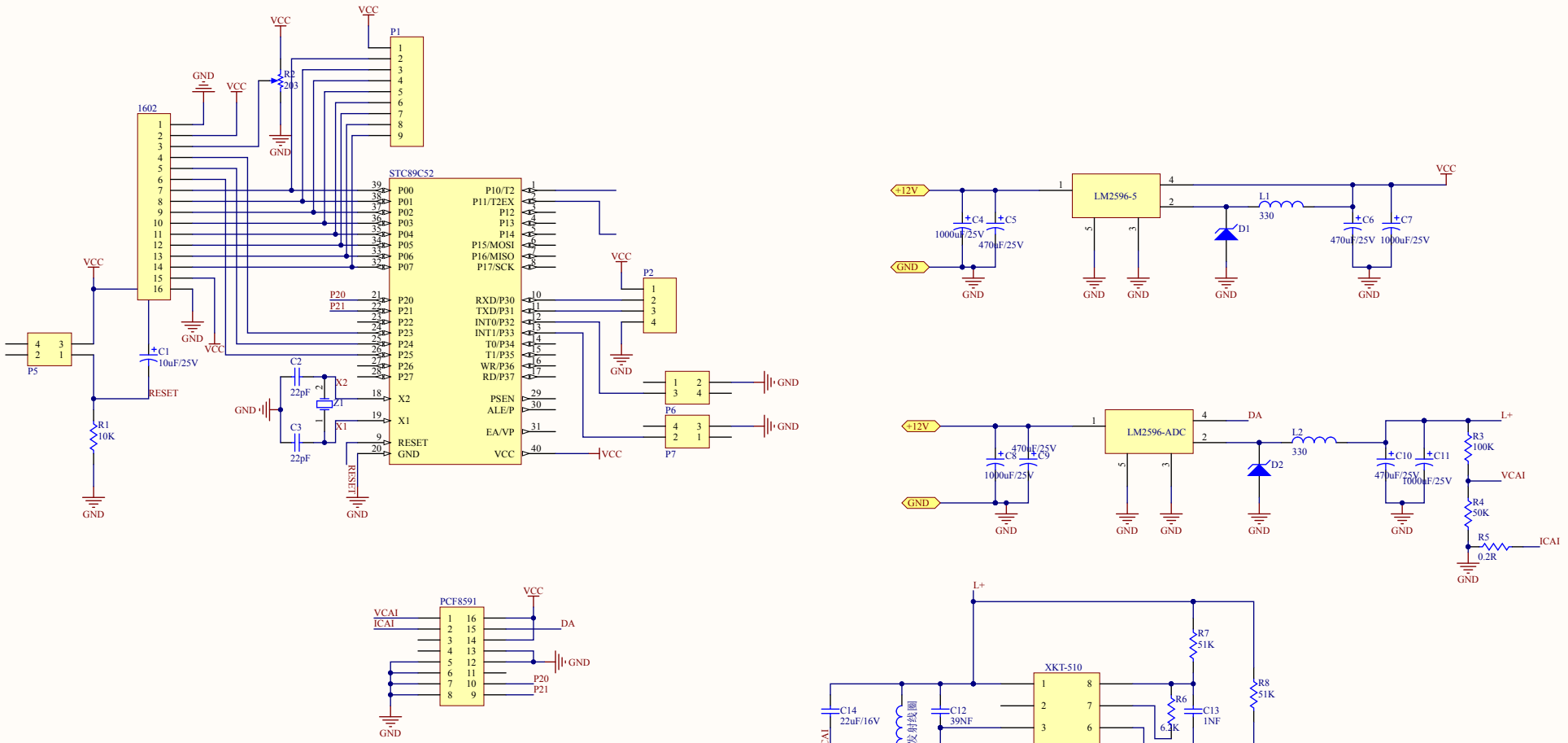

Title		
Size A3	Number	Revision
Date: 2018/11/16 星期五		Sheet of
File: E:\EDA\项目\无线充电\无线充电2\无线充电B.SchDoc		

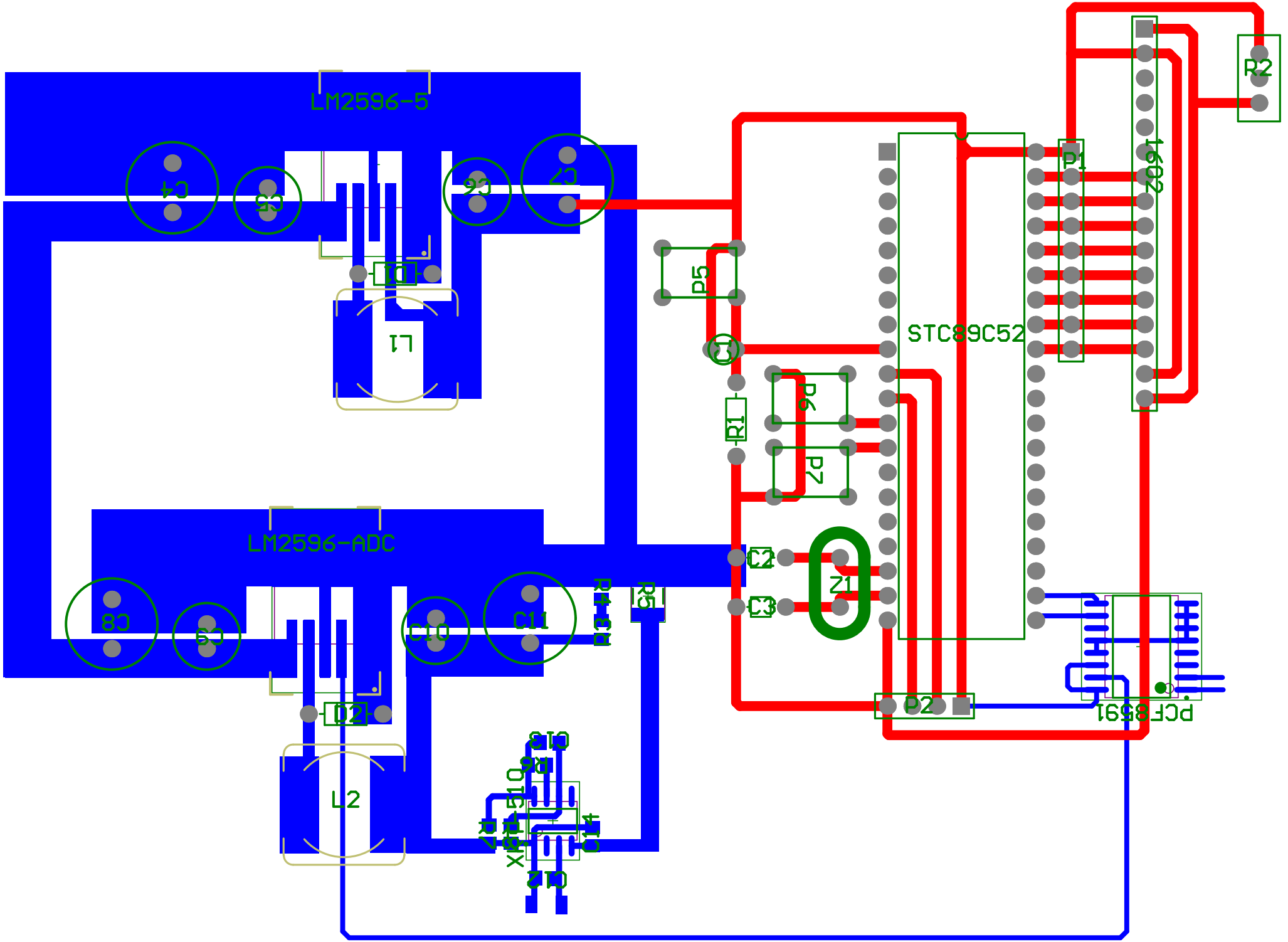
LM2596-5
C1
C5
C6
C7
D1
L1
P5
C1
R1
P6
P7
STC89C52
P1
1602
R2
LM2596-ADC
C8
C9
C10
C11
D3
R3
C2
C3
Z1
D2
L2
P2
PCF8591
C13
R6
C10
X1
C14
C12