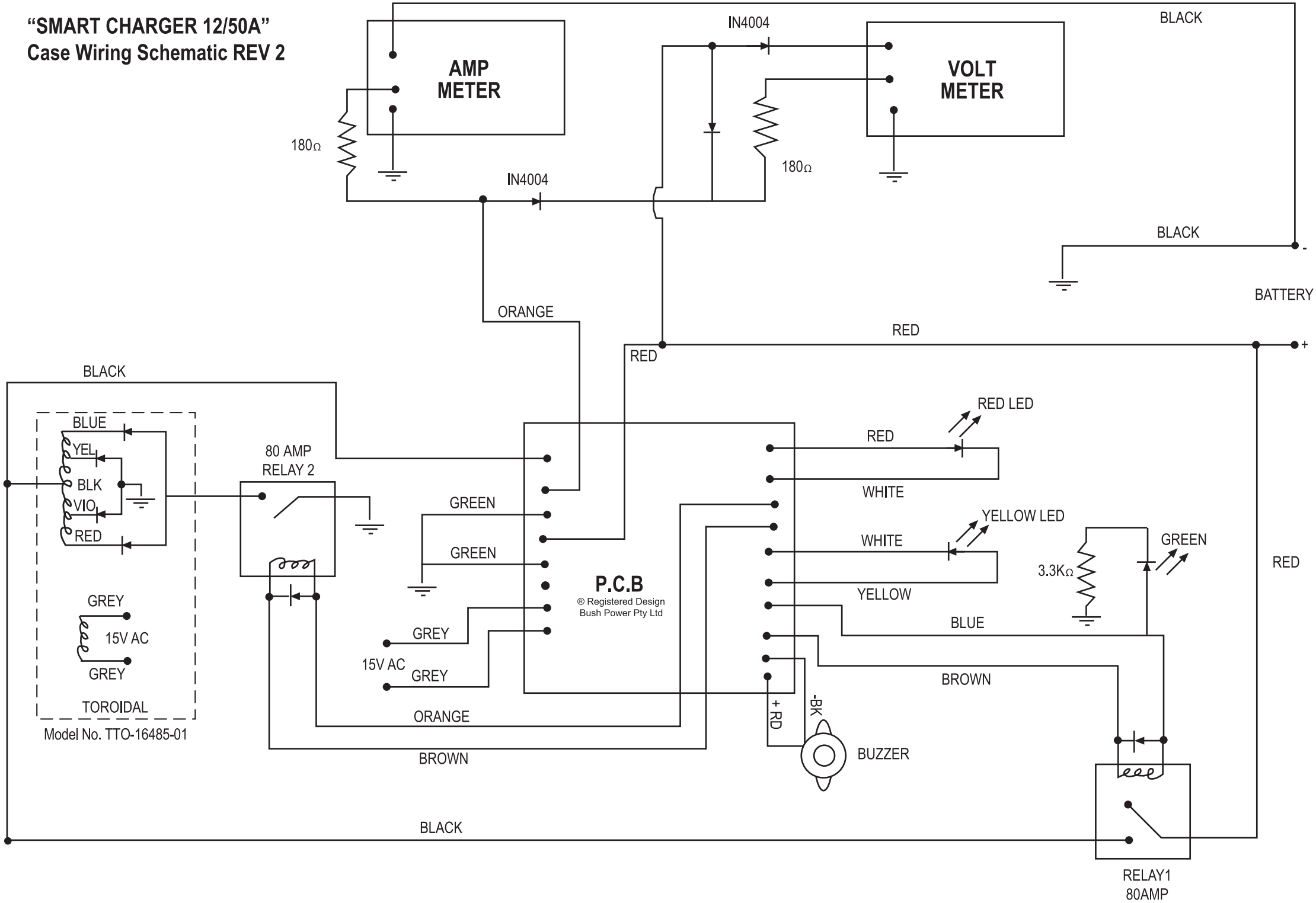"SMART CHARGER 12/50A"
Case Wiring Schematic REV 2