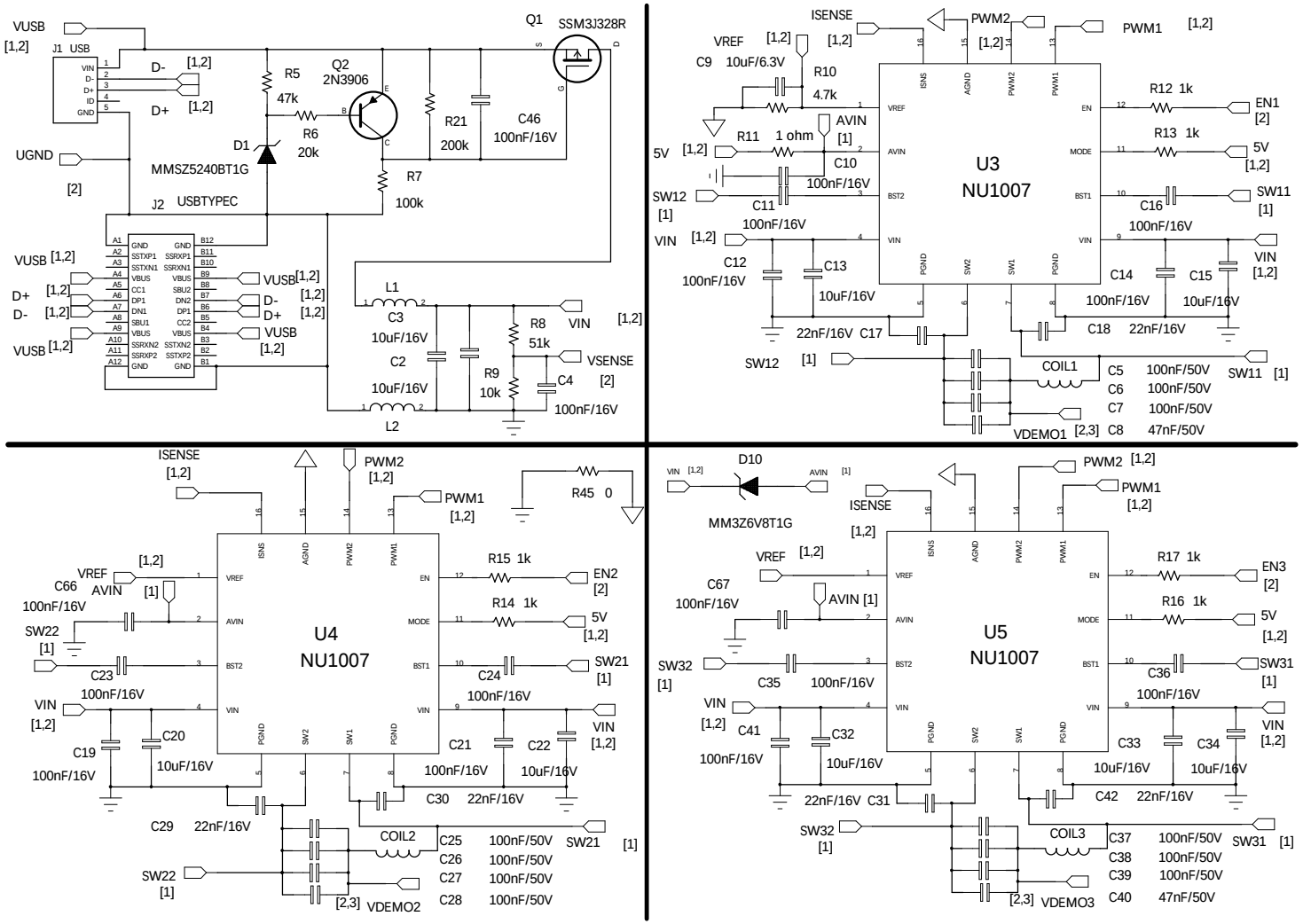
VUSB [1,2]
J1 USB
VIN
D-
D+
ID
GND
D- [1,2]
D+ [1,2]
UGND [2]
R5 47k
R6 20k
Q2 2N3906
D1 MMSZ5240BT1G
R7 100k
R21 200k
C46 100nF/16V
Q1 SSM3J328R
J2 USBTYPEC
VUSB [1,2]
D+ [1,2]
D- [1,2]
VUSB [1,2]
L1
C3 10uF/16V
C2 10uF/16V
L2
R8 51k
R9 10k
C4 100nF/16V
VIN [1,2]
VSENSE [2]
ISENSE [1,2]
PWM2 [1,2]
PWM1 [1,2]
VREF [1,2]
C9 10uF/6.3V
R10 4.7k
AVIN [1]
R11 1 ohm
C10 100nF/16V
5V [1,2]
SW12 [1]
C11 100nF/16V
VIN [1,2]
C12 100nF/16V
C13 10uF/16V
22nF/16V C17
U3
NU1007
ISNS
AGND
PWM2
PWM1
VREF
AVIN
BST2
VIN
PGND
SW2
SW1
PGND
EN
MODE
BST1
VIN
R12 1k
EN1 [2]
R13 1k
5V [1,2]
C16 100nF/16V
SW11 [1]
VIN [1,2]
C14 100nF/16V
C15 10uF/16V
C18 22nF/16V
SW12 [1]
COIL1
C5 100nF/50V
C6 100nF/50V
C7 100nF/50V
C8 47nF/50V
SW11 [1]
VDEMO1 [2,3]
ISENSE [1,2]
PWM2 [1,2]
PWM1 [1,2]
R45 0
VREF [1,2]
C66 100nF/16V
AVIN [1]
SW22 [1]
C23 100nF/16V
VIN [1,2]
C19 100nF/16V
C20 10uF/16V
U4
NU1007
R15 1k
EN2 [2]
R14 1k
5V [1,2]
C24 100nF/16V
SW21 [1]
VIN [1,2]
C21 100nF/16V
C22 10uF/16V
C30 22nF/16V
C29 22nF/16V
COIL2
C25 100nF/50V
C26 100nF/50V
C27 100nF/50V
C28 100nF/50V
SW21 [1]
SW22 [1]
[2,3] VDEMO2
VIN [1,2]
D10 MM3Z6V8T1G
AVIN [1]
PWM2 [1,2]
PWM1 [1,2]
ISENSE [1,2]
VREF [1,2]
C67 100nF/16V
AVIN [1]
SW32 [1]
C35 100nF/16V
VIN [1,2]
C41 100nF/16V
C32 10uF/16V
22nF/16V C31
U5
NU1007
R17 1k
EN3 [2]
R16 1k
5V [1,2]
C36 100nF/16V
SW31 [1]
VIN [1,2]
C33 100nF/16V
C34 10uF/16V
C42 22nF/16V
SW32 [1]
COIL3
C37 100nF/50V
C38 100nF/50V
C39 100nF/50V
C40 47nF/50V
SW31 [1]
[2,3] VDEMO3

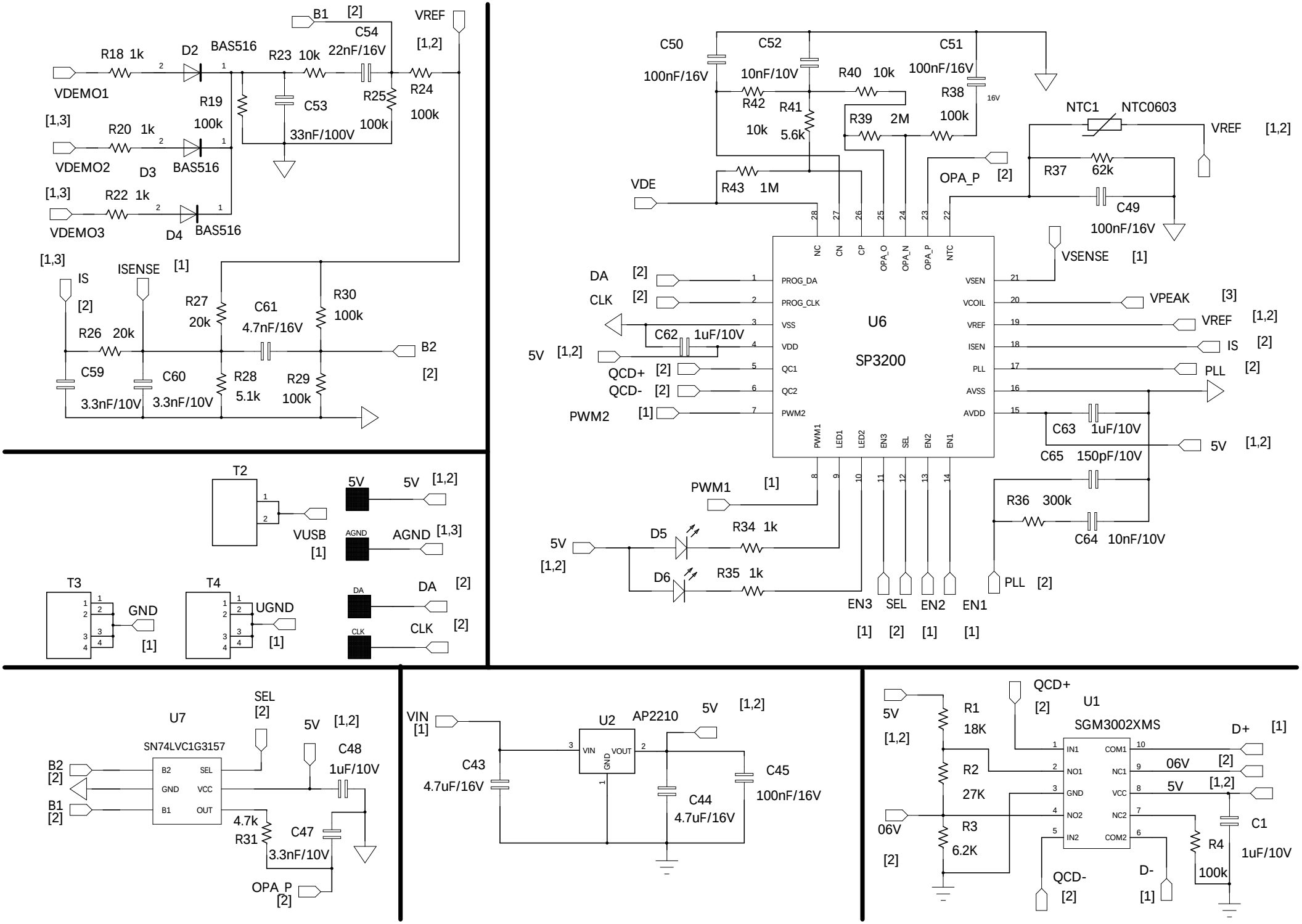
B1 [2]
VREF
[1,2]
C54
22nF/16V
R18 1k
D2 BAS516
R23 10k
R24
100k
VDEMO1
R19
100k
C53
33nF/100V
R25
100k
[1,3]
R20 1k
VDEMO2
D3 BAS516
[1,3]
R22 1k
VDEMO3
D4 BAS516
[1,3]
IS
[2]
ISENSE [1]
R27
20k
C61
4.7nF/16V
R30
100k
R26 20k
B2
[2]
C59
3.3nF/10V
C60
3.3nF/10V
R28
5.1k
R29
100k
T2
VUSB
[1]
5V
5V [1,2]
AGND
AGND [1,3]
T3
GND
[1]
T4
UGND
[1]
DA
DA [2]
CLK
CLK [2]
C50
100nF/16V
C52
10nF/10V
R40 10k
C51
100nF/16V
R38
100k
16V
R42
10k
R41
5.6k
R39 2M
NTC1 NTC0603
VREF [1,2]
R37 62k
OPA_P [2]
VDE
R43 1M
C49
100nF/16V
VSENSE [1]
DA [2]
CLK [2]
5V [1,2]
C62 1uF/10V
QCD+ [2]
QCD- [2]
PWM2 [1]
NC
CN
CP
OPA_O
OPA_N
OPA_P
NTC
PROG_DA
PROG_CLK
VSS
VDD
QC1
QC2
PWM2
U6
SP3200
VSEN
VCOIL
VREF
ISEN
PLL
AVSS
AVDD
VPEAK [3]
VREF [1,2]
IS [2]
PLL [2]
C63 1uF/10V
5V [1,2]
C65 150pF/10V
PWM1
LED1
LED2
EN3
SEL
EN2
EN1
PWM1 [1]
R36 300k
C64 10nF/10V
5V
[1,2]
D5
R34 1k
D6
R35 1k
PLL [2]
EN3 SEL EN2 EN1
[1] [2] [1] [1]
U7
SN74LVC1G3157
SEL
[2]
5V [1,2]
C48
1uF/10V
B2
[2]
B1
[2]
B2
GND
B1
SEL
VCC
OUT
4.7k
R31
C47
3.3nF/10V
OPA_P
[2]
VIN
[1]
U2
AP2210
5V [1,2]
C43
4.7uF/16V
VIN
GND
VOUT
C44
4.7uF/16V
C45
100nF/16V
5V
[1,2]
R1
18K
QCD+
[2]
U1
SGM3002XMS
D+ [1]
R2
27K
06V [2]
5V [1,2]
06V
[2]
R3
6.2K
IN1
NO1
GND
NO2
IN2
COM1
NC1
VCC
NC2
COM2
C1
1uF/10V
R4
100k
QCD-
[2]
D-
[1]

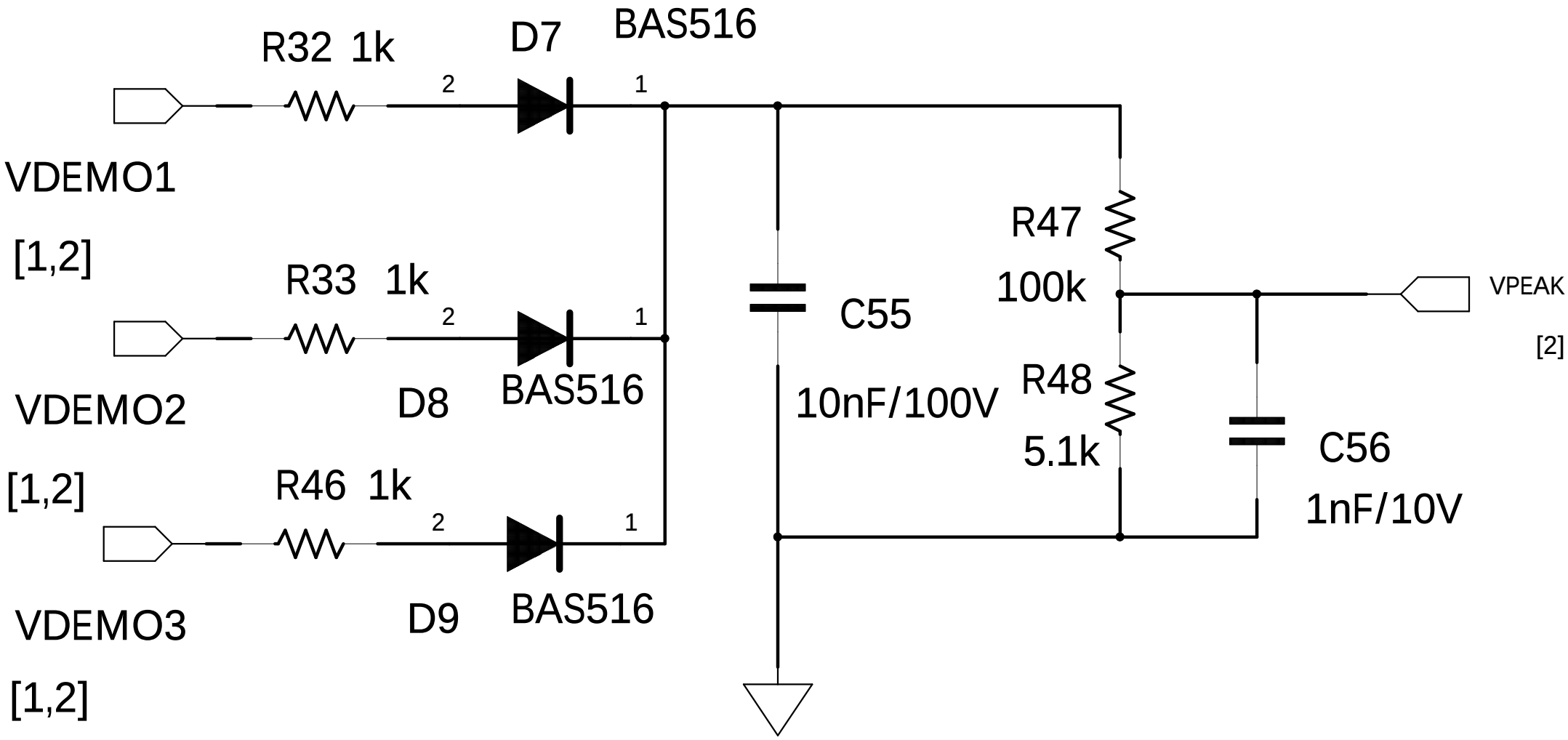
R32 1k
D7
BAS516
2
1
VDEMO1
[1,2]
R33 1k
2
1
VDEMO2
D8
BAS516
[1,2]
R46 1k
2
1
VDEMO3
D9
BAS516
[1,2]
C55
10nF/100V
R47
100k
R48
5.1k
C56
1nF/10V
VPEAK
[2]