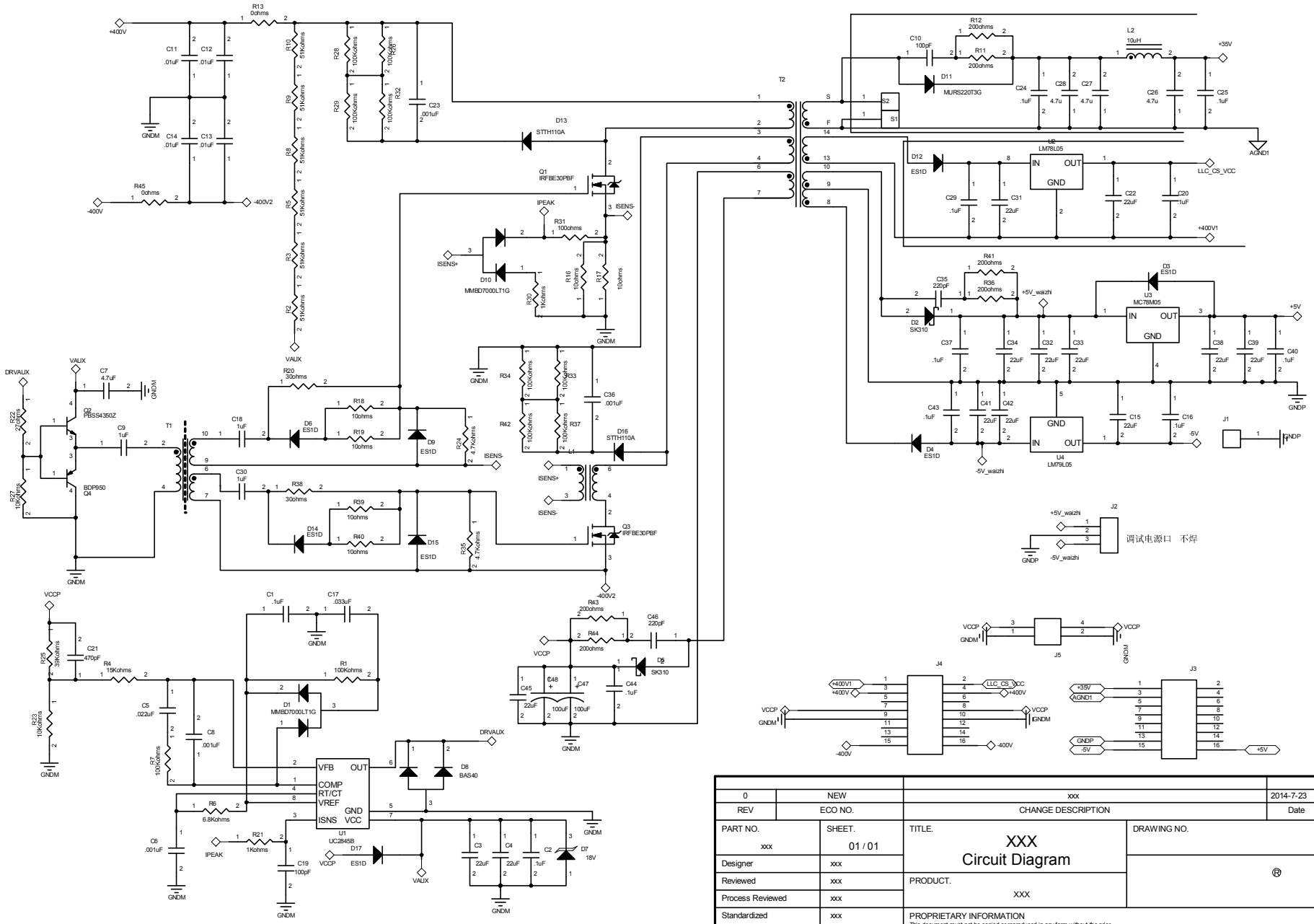

0	NEW	xxx	2014-7-23
REV	ECO NO.	CHANGE DESCRIPTION	Date

PART NO. xxx	SHEET. 01 / 01	TITLE. XXX Circuit Diagram	DRAWING NO.
Designer	xxx		®
Reviewed	xxx	PRODUCT. XXX	
Process Reviewed	xxx		
Standardized	xxx	PROPRIETARY INFORMATION This document must not be copied or reproduced in any form without the prior	
Approved	xxx		