Datasheet5
——集成电路查询网

Order this document by SG3525A/D

MOTOROLA

SG3525A
SG3527A

Pulse Width Modulator Control Circuits

The SG3525A, SG3527A pulse width modulator control circuits offer improved performance and lower external parts count when implemented for controlling all types of switching power supplies. The on–chip +5.1 V reference is trimmed to ±1% and the error amplifier has an input common–mode voltage range that includes the reference voltage, thus eliminating the need for external divider resistors. A sync input to the oscillator enables multiple units to be slaved or a single unit to be synchronized to an external system clock. A wide range of deadtime can be programmed by a single resistor connected between the C_T and Discharge pins. These devices also feature built–in soft–start circuitry, requiring only an external timing capacitor. A shutdown pin controls both the soft–start circuitry and the output stages, providing instantaneous turn off through the PWM latch with pulsed shutdown, as well as soft–start recycle with longer shutdown commands. The under voltage lockout inhibits the outputs and the changing of the soft–start capacitor when V_{CC} is below nominal. The output stages are totem–pole design capable of sinking and sourcing in excess of 200 mA. The output stage of the SG3525A features NOR logic resulting in a low output for an off–state while the SG3527A utilized OR logic which gives a high output when off.

- 8.0 V to 35 V Operation
- 5.1 V ± 1.0% Trimmed Reference
- 100 Hz to 400 kHz Oscillator Range
- Separate Oscillator Sync Pin
- Adjustable Deadtime Control
- Input Undervoltage Lockout
- Latching PWM to Prevent Multiple Pulses
- Pulse–by–Pulse Shutdown
- Dual Source/Sink Outputs: ±400 mA Peak

Representative Block Diagram

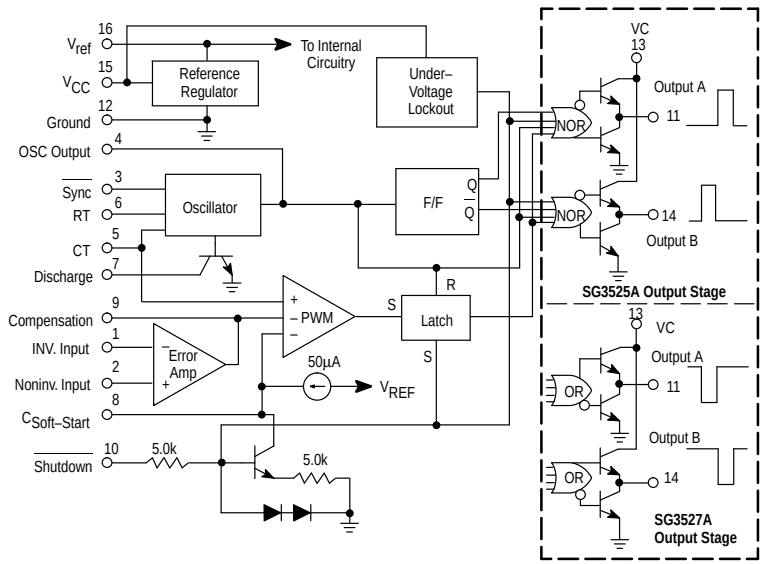

PULSE WIDTH MODULATOR CONTROL CIRCUITS

SEMICONDUCTOR TECHNICAL DATA

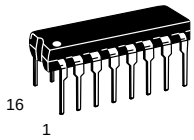

N SUFFIX
PLASTIC PACKAGE
CASE 648

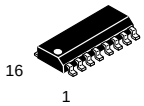

DW SUFFIX
PLASTIC PACKAGE
CASE 751B
(SO–16L)

PIN CONNECTIONS

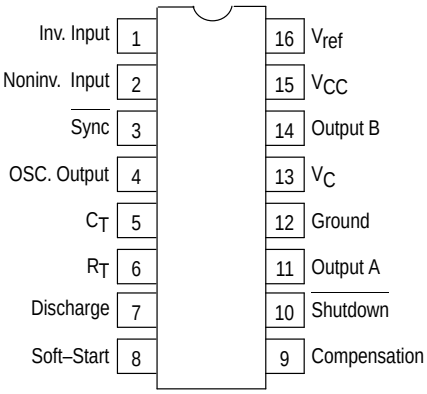

(Top View)

ORDERING INFORMATION

Device	Operating Temperature Range	Package
SG3525AN	T_A = 0° to +70°C	Plastic DIP
SG3525ADW		SO–16L
SG3527AN		Plastic DIP

© Motorola, Inc. 1996

Datasheet5
——集成电路查询网

MAXIMUM RATINGS (Note 1)

Rating	Symbol	Value	Unit
Supply Voltage	V_{CC}	+40	Vdc
Collector Supply Voltage	V_C	+40	Vdc
Logic Inputs		–0.3 to +5.5	V
Analog Inputs		–0.3 to V_{CC}	V
Output Current, Source or Sink	I_O	±500	mA
Reference Output Current	I_{ref}	50	mA
Oscillator Charging Current		5.0	mA
Power Dissipation (Plastic & Ceramic Package) T_A = +25°C (Note 2) T_C = +25°C (Note 3)	P_D	 1000 2000	mW
Thermal Resistance Junction–to–Air	$R_{\theta JA}$	100	°C/W
Thermal Resistance Junction–to–Case	$R_{\theta JC}$	60	°C/W
Operating Junction Temperature	T_J	+150	°C
Storage Temperature Range	T_{stg}	–55 to +125	°C
Lead Temperature (Soldering, 10 seconds)	T_{Solder}	+300	°C

NOTES: 1. Values beyond which damage may occur.
2. Derate at 10 mW/°C for ambient temperatures above +50°C.
3. Derate at 16 mW/°C for case temperatures above +25°C.

RECOMMENDED OPERATING CONDITIONS

Characteristics	Symbol	Min	Max	Unit
Supply Voltage	V_{CC}	8.0	35	Vdc
Collector Supply Voltage	V_C	4.5	35	Vdc
Output Sink/Source Current (Steady State) (Peak)	I_O	 0 0	 ±100 ±400	mA
Reference Load Current	I_{ref}	0	20	mA
Oscillator Frequency Range	f_{osc}	0.1	400	kHz
Oscillator Timing Resistor	R_T	2.0	150	kΩ
Oscillator Timing Capacitor	C_T	0.001	0.2	µF
Deadtime Resistor Range	R_D	0	500	Ω
Operating Ambient Temperature Range	T_A	0	+70	°C

APPLICATION INFORMATION

Shutdown Options (See Block diagram, front page)

Since both the compensation and soft–start terminals (Pins 9 and 8) have current source pull–ups, either can readily accept a pull–down signal which only has to sink a maximum of 100 µA to turn off the outputs. This is subject to the added requirement of discharging whatever external capacitance may be attached to these pins.

An alternate approach is the use of the shutdown circuitry of Pin 10 which has been improved to enhance the available shutdown options. Activating this circuit by applying a positive signal on Pin 10 performs two functions: the PWM latch is immediately set providing the fastest turn–off signal to the outputs; and a 150 µA current sink begins to discharge the external soft–start capacitor. If the shutdown command is short, the PWM signal is terminated without significant discharge of the soft–start capacitor, thus, allowing, for example, a convenient implementation of pulse–by–pulse current limiting. Holding Pin 10 high for a longer duration, however, will ultimately discharge this external capacitor, recycling slow turn–on upon release.

Pin 10 should not be left floating as noise pickup could conceivably interrupt normal operation.

Datasheet5
——集成电路查询网

ELECTRICAL CHARACTERISTICS (V_{CC} = +20 Vdc, T_A = T_{low} to T_{high} [Note 4], unless otherwise noted.)

Characteristics	Symbol	Min	Typ	Max	Unit
REFERENCE SECTION					
Reference Output Voltage (T_J = +25°C)	V_{ref}	5.00	5.10	5.20	Vdc
Line Regulation (+8.0 V ≤ V_{CC} ≤ +35 V)	Reg_{line}	–	10	20	mV
Load Regulation (0 mA ≤ I_L ≤ 20 mA)	Reg_{load}	–	20	50	mV
Temperature Stability	$\Delta V_{ref}/\Delta T$	–	20	–	mV
Total Output Variation Includes Line and Load Regulation over Temperature	ΔV_{ref}	4.95	–	5.25	Vdc
Short Circuit Current (V_{ref} = 0 V, T_J = +25°C)	I_{SC}	–	80	100	mA
Output Noise Voltage (10 Hz ≤ f ≤ 10 kHz, T_J = +25°C)	V_n	–	40	200	μV_{rms}
Long Term Stability (T_J = +125°C) (Note 5)	S	–	20	50	mV/khr
OSCILLATOR SECTION (Note 6, unless otherwise noted.)					
Initial Accuracy (T_J = +25°C)		–	±2.0	±6.0	%
Frequency Stability with Voltage (+8.0 V ≤ V_{CC} ≤ +35 V)	$\frac{\Delta f_{osc}}{D\ VCC}$	–	±1.0	±2.0	%
Frequency Stability with Temperature	$\frac{\Delta f_{osc}}{D\ T}$	–	±0.3	–	%
Minimum Frequency (R_T = 150 kΩ, C_T = 0.2 µF)	f_{min}	–	50	–	Hz
Maximum Frequency (R_T = 2.0 kΩ, C_T = 1.0 nF)	f_{max}	400	–	–	kHz
Current Mirror (I_{RT} = 2.0 mA)		1.7	2.0	2.2	mA
Clock Amplitude		3.0	3.5	–	V
Clock Width (T_J = +25°C)		0.3	0.5	1.0	µs
Sync Threshold		1.2	2.0	2.8	V
Sync Input Current (Sync Voltage = +3.5 V)		–	1.0	2.5	mA
ERROR AMPLIFIER SECTION (V_{CM} = +5.1 V)					
Input Offset Voltage	V_{IO}	–	2.0	10	mV
Input Bias Current	I_{IB}	–	1.0	10	µA
Input Offset Current	I_{IO}	–	–	1.0	µA
DC Open Loop Gain (R_L ≥ 10 MΩ)	A_{VOL}	60	75	–	dB
Low Level Output Voltage	V_{OL}	–	0.2	0.5	V
High Level Output Voltage	V_{OH}	3.8	5.6	–	V
Common Mode Rejection Ratio (+1.5 V ≤ V_{CM} ≤ +5.2 V)	CMRR	60	75	–	dB
Power Supply Rejection Ratio (+8.0 V ≤ V_{CC} ≤ +35 V)	PSRR	50	60	–	dB
PWM COMPARATOR SECTION					
Minimum Duty Cycle	DC_{min}	–	–	0	%
Maximum Duty Cycle	DC_{max}	45	49	–	%
Input Threshold, Zero Duty Cycle (Note 6)	V_{th}	0.6	0.9	–	V
Input Threshold, Maximum Duty Cycle (Note 6)	V_{th}	–	3.3	3.6	V
Input Bias Current	I_{IB}	–	0.05	1.0	µA

NOTES: 4. T_{low} = 0° for SG3525A, 3527A T_{high} = +70°C for SG3525A, 3527A
5. Since long term stability cannot be measured on each device before shipment, this specification is an engineering estimate of average stability from lot to lot.
6. Tested at f_{osc} = 40 kHz (R_T = 3.6 kΩ, C_T = 0.01 µF, R_D = 0Ω).

ELECTRICAL CHARACTERISTICS (Continued)

Characteristics	Symbol	Min	Typ	Max	Unit
SOFT–START SECTION					
Soft–Start Current ($V_{shutdown}$ = 0 V)		25	50	80	µA
Soft–Start Voltage ($V_{shutdown}$ = 2.0 V)		–	0.4	0.6	V
Shutdown Input Current ($V_{shutdown}$ = 2.5 V)		–	0.4	1.0	mA
OUTPUT DRIVERS (Each Output, V_{CC} = +20 V)					
Output Low Level (I_{sink} = 20 mA) (I_{sink} = 100 mA)	V_{OL}	 – –	 0.2 1.0	 0.4 2.0	V
Output High Level (I_{source} = 20 mA) (I_{source} = 100 mA)	V_{OH}	 18 17	 19 18	 – –	V
Under Voltage Lockout (V8 and V9 = High)	V_{UL}	6.0	7.0	8.0	V
Collector Leakage, V_C = +35 V (Note 7)	$I_{C(leak)}$	–	–	200	µA
Rise Time (C_L = 1.0 nF, T_J = 25°C)	t_r	–	100	600	ns
Fall Time (C_L = 1.0 nF, T_J = 25°C)	t_f	–	50	300	ns
Shutdown Delay (V_{DS} = +3.0 V, C_S = 0, T_J = +25°C)	t_{ds}	–	0.2	0.5	µs
Supply Current (V_{CC} = +35 V)	I_{CC}	–	14	20	mA

NOTE: 7. Applies to SG3525A only, due to polarity of output pulses.

Lab Test Fixture

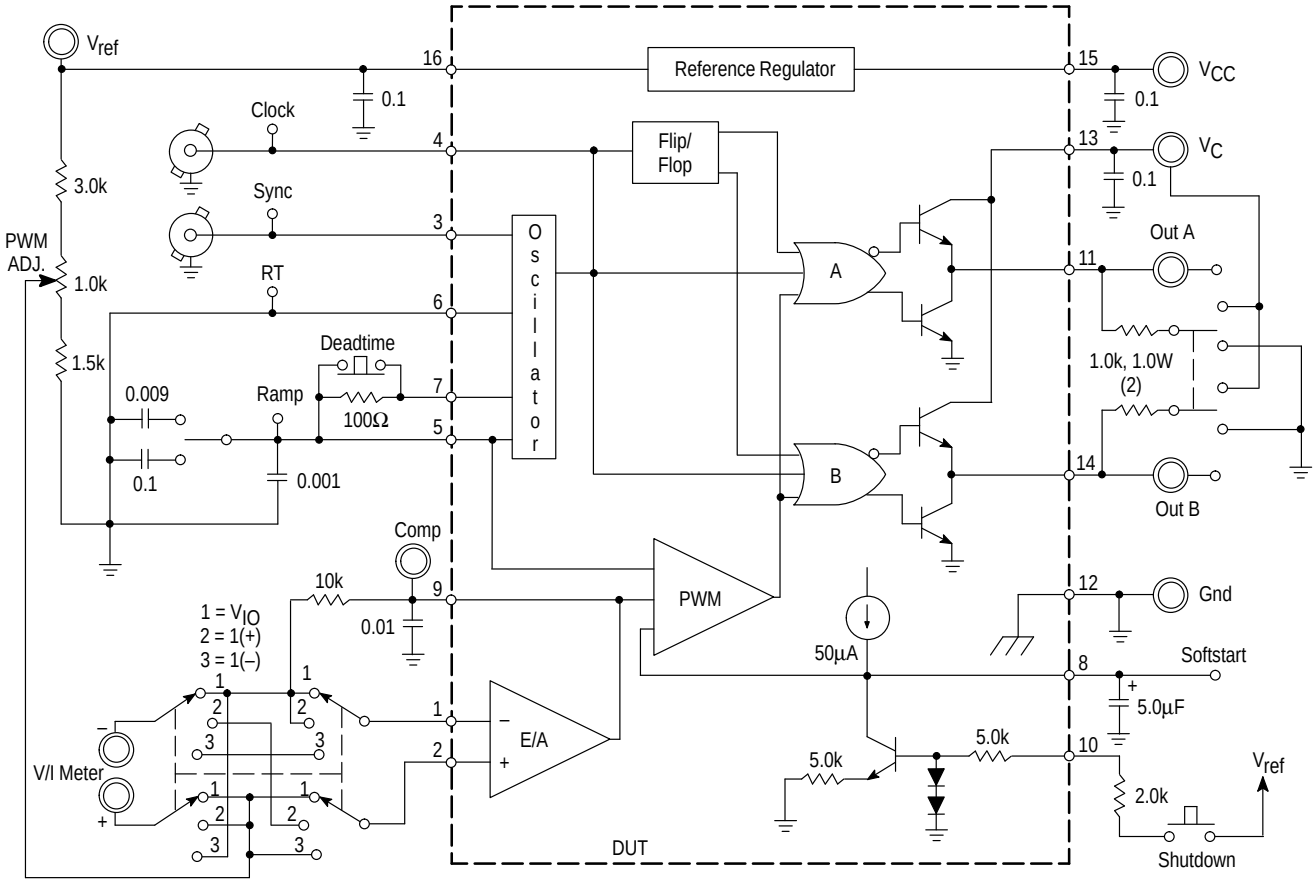

Figure 1. Oscillator Charge Time versus R_T

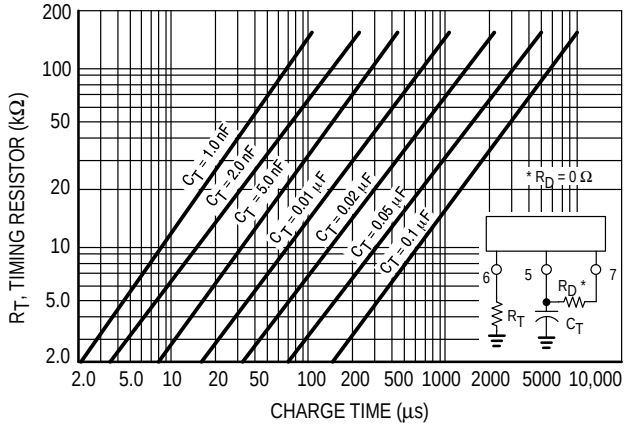

Figure 2. Oscillator Discharge Time versus R_D

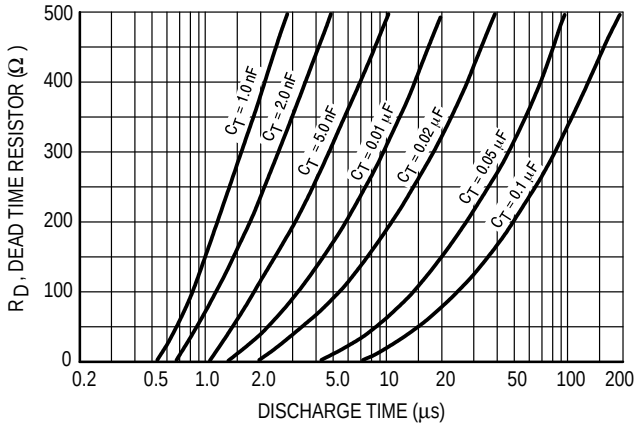

Figure 3. Error Amplifier Open Loop Frequency Response

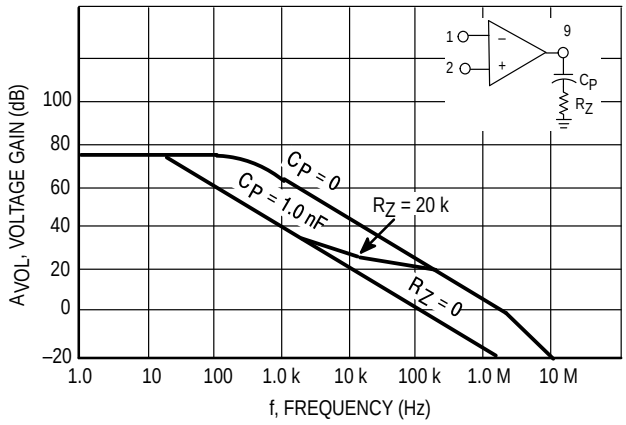

Figure 4. Output Saturation Characteristics (SG3525A)

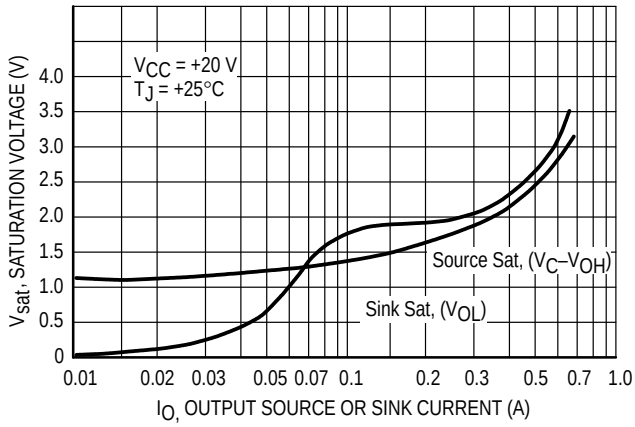

Figure 5. Oscillator Schematic (SG3525A)

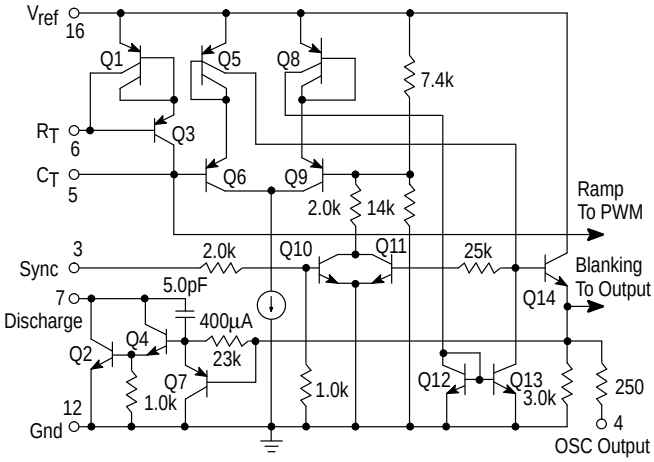

Figure 6. Error Amplifier Schematic (SG3525A)

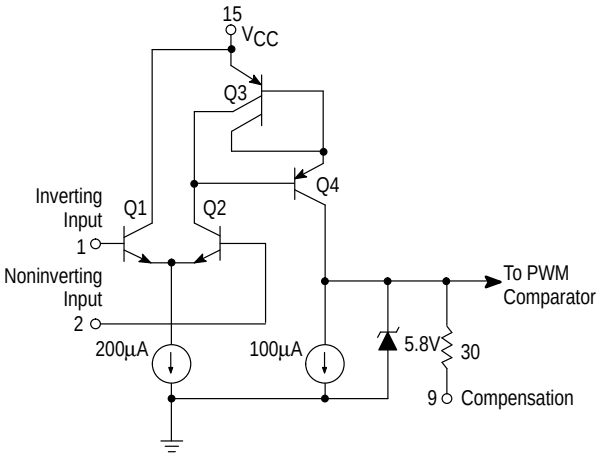

Figure 7. SG3525A Output Circuit
(1/2 Circuit Shown)

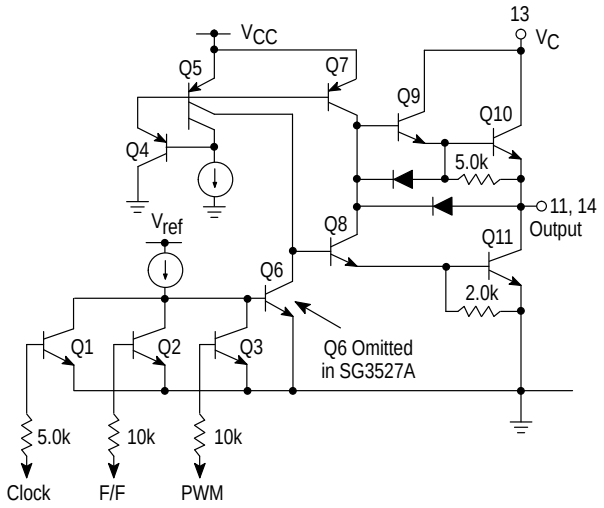

Figure 8. Single–Ended Supply

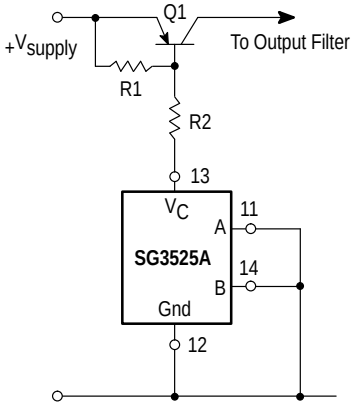

For single–ended supplies, the driver outputs are grounded. The V_C terminal is switched to ground by the totem–pole source transistors on alternate oscillator cycles.

Figure 9. Push–Pull Configuration

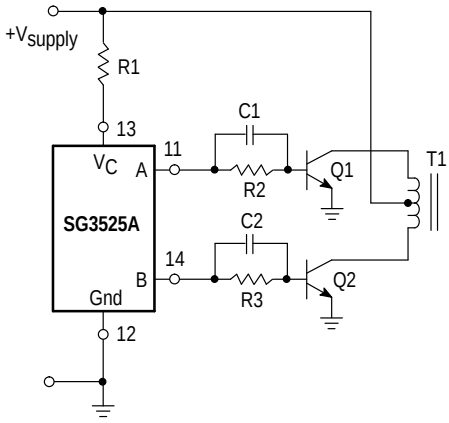

In conventional push–pull bipolar designs, forward base drive is controlled by R1–R3. Rapid turn–off times for the power devices are achieved with speed–up capacitors C1 and C2.

Figure 10. Driving Power FETS

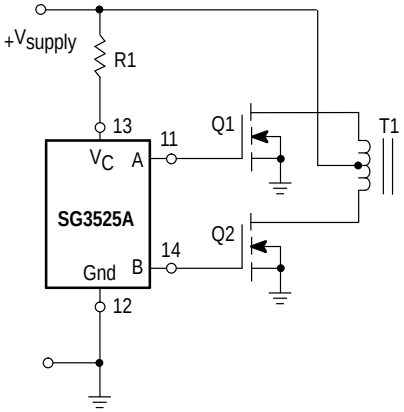

The low source impedance of the output drivers provides rapid charging of power FET input capacitance while minimizing external components.

Figure 11. Driving Transformers in a Half–Bridge Configuration

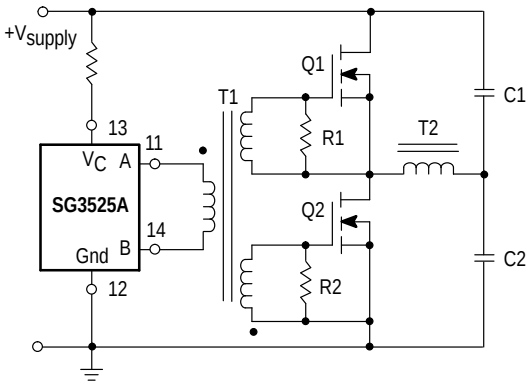

Low power transformers can be driven directly by the SG3525A. Automatic reset occurs during deadtime, when both ends of the primary winding are switched to ground.

OUTLINE DIMENSIONS

N SUFFIX
PLASTIC PACKAGE
CASE 648–08
ISSUE R

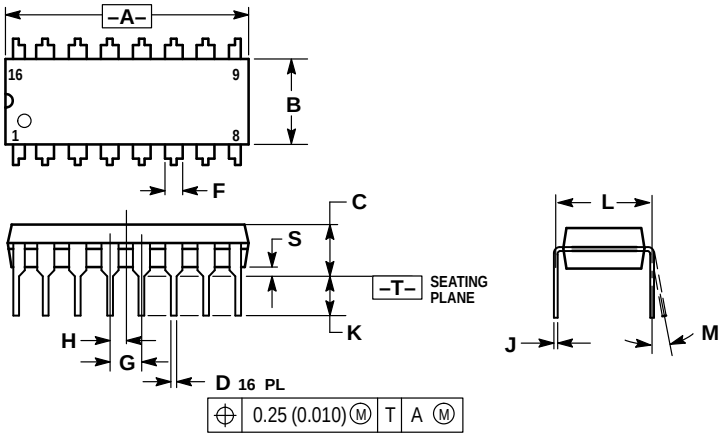

NOTES:
1. DIMENSIONING AND TOLERANCING PER ANSI Y14.5M, 1982.
2. CONTROLLING DIMENSION: INCH.
3. DIMENSION L TO CENTER OF LEADS WHEN FORMED PARALLEL.
4. DIMENSION B DOES NOT INCLUDE MOLD FLASH.
5. ROUNDED CORNERS OPTIONAL.

	INCHES		MILLIMETERS	
DIM	MIN	MAX	MIN	MAX
A	0.740	0.770	18.80	19.55
B	0.250	0.270	6.35	6.85
C	0.145	0.175	3.69	4.44
D	0.015	0.021	0.39	0.53
F	0.040	0.70	1.02	1.77
G	0.100 BSC		2.54 BSC	
H	0.050 BSC		1.27 BSC	
J	0.008	0.015	0.21	0.38
K	0.110	0.130	2.80	3.30
L	0.295	0.305	7.50	7.74
M	0°	10°	0°	10°
S	0.020	0.040	0.51	1.01

DW SUFFIX
PLASTIC PACKAGE
CASE 751B–05
(SO–16L)
ISSUE J

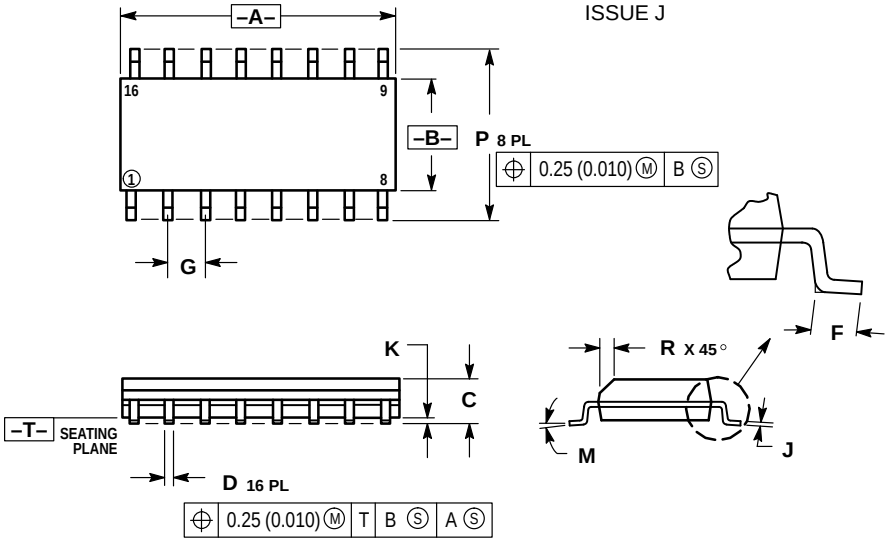

NOTES:
1. DIMENSIONING AND TOLERANCING PER ANSI Y14.5M, 1982.
2. CONTROLLING DIMENSION: MILLIMETER.
3. DIMENSIONS A AND B DO NOT INCLUDE MOLD PROTRUSION.
4. MAXIMUM MOLD PROTRUSION 0.15 (0.006) PER SIDE.
5. DIMENSION D DOES NOT INCLUDE DAMBAR PROTRUSION. ALLOWABLE DAMBAR PROTRUSION SHALL BE 0.127 (0.005) TOTAL IN EXCESS OF THE D DIMENSION AT MAXIMUM MATERIAL CONDITION.

	MILLIMETERS		INCHES	
DIM	MIN	MAX	MIN	MAX
A	9.80	10.00	0.386	0.393
B	3.80	4.00	0.150	0.157
C	1.35	1.75	0.054	0.068
D	0.35	0.49	0.014	0.019
F	0.40	1.25	0.016	0.049
G	1.27 BSC		0.050 BSC	
J	0.19	0.25	0.008	0.009
K	0.10	0.25	0.004	0.009
M	0°	7°	0°	7°
P	5.80	6.20	0.229	0.244
R	0.25	0.50	0.010	0.019

Motorola reserves the right to make changes without further notice to any products herein. Motorola makes no warranty, representation or guarantee regarding the suitability of its products for any particular purpose, nor does Motorola assume any liability arising out of the application or use of any product or circuit, and specifically disclaims any and all liability, including without limitation consequential or incidental damages. “Typical” parameters which may be provided in Motorola data sheets and/or specifications can and do vary in different applications and actual performance may vary over time. All operating parameters, including “Typicals” must be validated for each customer application by customer’s technical experts. Motorola does not convey any license under its patent rights nor the rights of others. Motorola products are not designed, intended, or authorized for use as components in systems intended for surgical implant into the body, or other applications intended to support or sustain life, or for any other application in which the failure of the Motorola product could create a situation where personal injury or death may occur. Should Buyer purchase or use Motorola products for any such unintended or unauthorized application, Buyer shall indemnify and hold Motorola and its officers, employees, subsidiaries, affiliates, and distributors harmless against all claims, costs, damages, and expenses, and reasonable attorney fees arising out of, directly or indirectly, any claim of personal injury or death associated with such unintended or unauthorized use, even if such claim alleges that Motorola was negligent regarding the design or manufacture of the part. Motorola and Ⓜ are registered trademarks of Motorola, Inc. Motorola, Inc. is an Equal Opportunity/Affirmative Action Employer.

How to reach us:
USA / EUROPE / Locations Not Listed: Motorola Literature Distribution;
P.O. Box 20912; Phoenix, Arizona 85036. 1–800–441–2447 or 602–303–5454

MFAX: RMFAX0@email.sps.mot.com – TOUCHTONE 602–244–6609
INTERNET: http://Design–NET.com

JAPAN: Nippon Motorola Ltd.; Tatsumi–SPD–JLDC, 6F Seibu–Butsuryu–Center,
3–14–2 Tatsumi Koto–Ku, Tokyo 135, Japan. 03–81–3521–8315

ASIA / PACIFIC: Motorola Semiconductors H.K. Ltd.; 8B Tai Ping Industrial Park,
51 Ting Kok Road, Tai Po, N.T., Hong Kong. 852–26629298