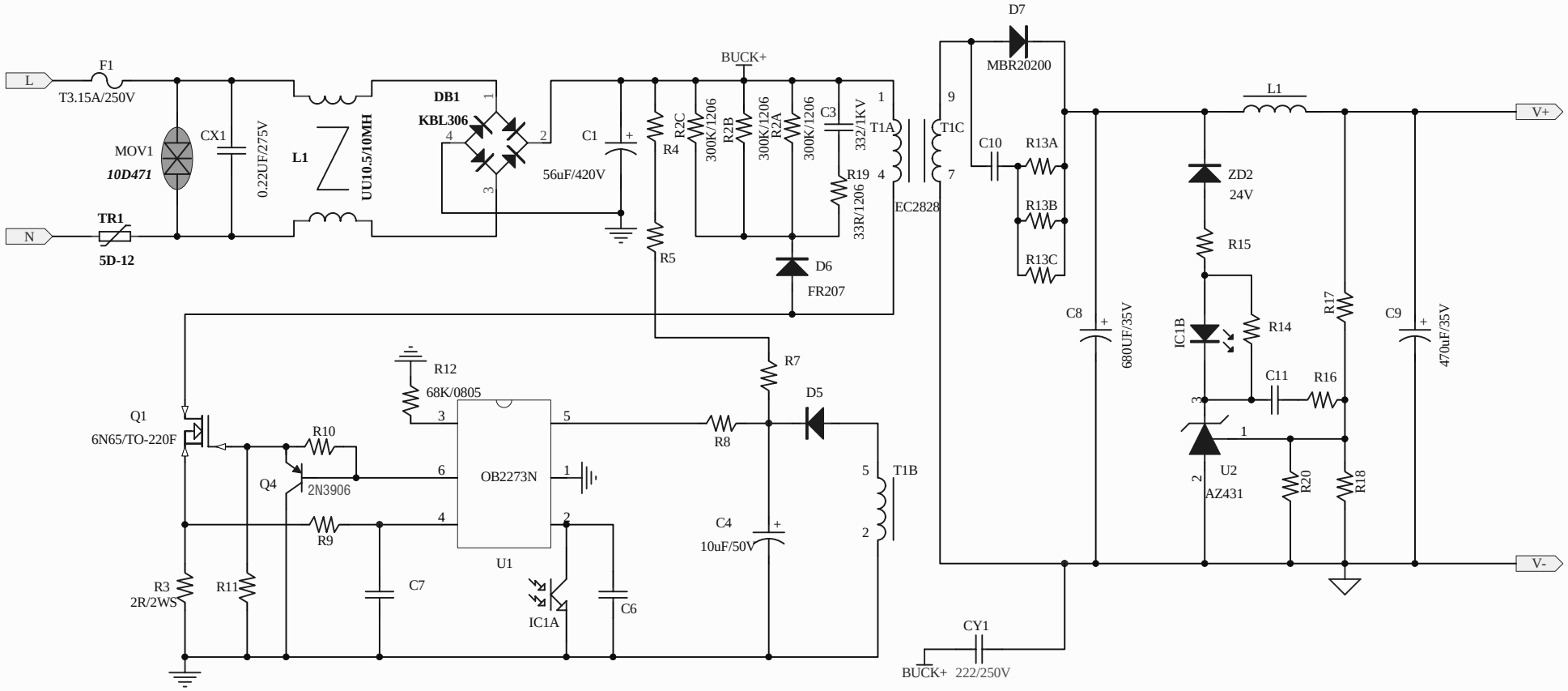
L
N
F1
T3.15A/250V
MOV1
10D471
CX1
0.22UF/275V
TR1
5D-12
L1
UU10.5/10MH
DB1
KBL306
C1
56uF/420V
BUCK+
R4
R5
R2C
300K/1206
R2B
300K/1206
R2A
300K/1206
C3
332/1KV
R19
33R/1206
D6
FR207
T1A
T1C
EC2828
D7
MBR20200
C10
R13A
R13B
R13C
L1
V+
V-
ZD2
24V
R15
IC1B
R14
C11
R16
R17
R18
R20
U2
AZ431
C8
680UF/35V
C9
470uF/35V
R12
68K/0805
R7
R8
D5
T1B
C4
10uF/50V
Q1
6N65/TO-220F
R10
Q4
2N3906
R9
OB2273N
U1
R3
2R/2WS
R11
C7
IC1A
C6
CY1
BUCK+ 222/250V

A0

1 1

Sheng