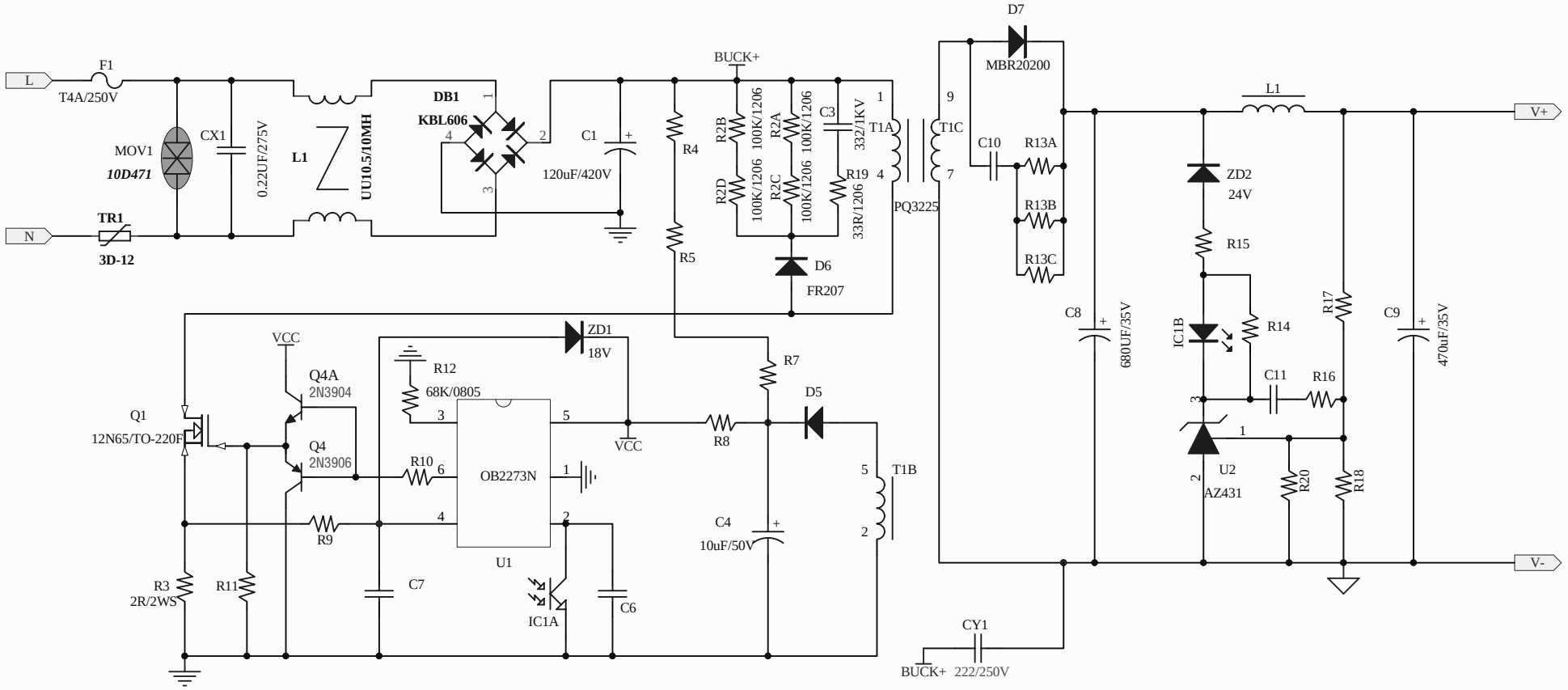
L
N
F1
T4A/250V
MOV1
10D471
CX1
0.22UF/275V
TR1
3D-12
L1
UU10.5/10MH
DB1
KBL606
C1
120uF/420V
BUCK+
R4
R5
R2B
100K/1206
R2D
100K/1206
R2A
100K/1206
R2C
100K/1206
C3
332/1KV
R19
33R/1206
D6
FR207
T1A
T1C
PQ3225
D7
MBR20200
C10
R13A
R13B
R13C
L1
V+
V-
ZD2
24V
R15
IC1B
R14
C11
R16
R17
R18
R20
U2
AZ431
C8
680UF/35V
C9
470uF/35V
CY1
222/250V
BUCK+
VCC
Q4A
2N3904
Q4
2N3906
Q1
12N65/TO-220F
R12
68K/0805
ZD1
18V
R7
D5
R8
R10
R9
OB2273N
U1
C4
10uF/50V
T1B
R3
2R/2WS
R11
C7
IC1A
C6

A0

1 1

Sheng