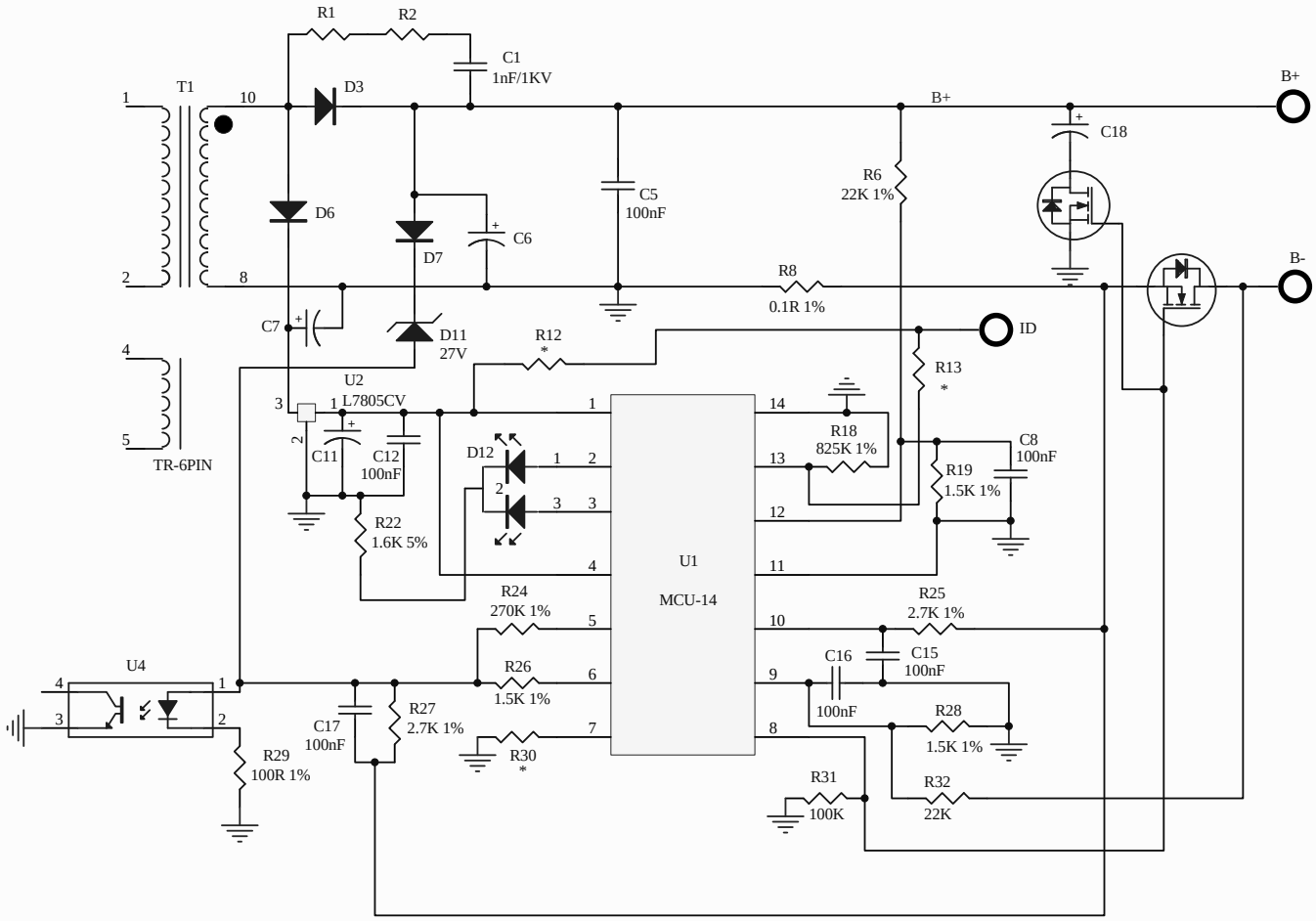

Title		
Size A4	Number	Revision
Date: 2016-3-29	Sheet of	
File: F:\ADAPTER\镍氢\复件 TAN18 R1.sch	Drawn By:	