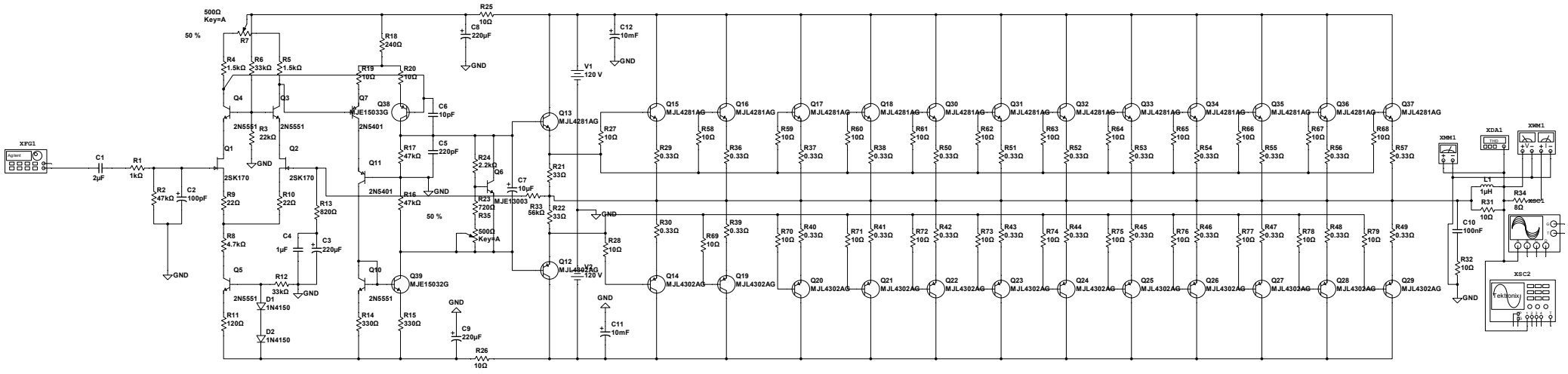
XFG1
C1
2µF
R1
1kΩ
R2
47kΩ
C2
100pF
GND
Q1
2SK170
Q2
2SK170
R9
22Ω
R10
22Ω
R8
4.7kΩ
Q5
2N5551
R11
120Ω
R12
33kΩ
D1
1N4150
D2
1N4150
R13
820Ω
C4
1µF
C3
220µF
500Ω
Key=A
50 %
R7
R4
1.5kΩ
R6
33kΩ
R5
1.5kΩ
Q4
Q3
2N5551
R3
22kΩ
2N5551
R18
240Ω
R19
10Ω
R20
10Ω
Q7
MJE15033G
Q38
C6
10pF
2N5401
R17
47kΩ
C5
220pF
Q11
2N5401
R16
47kΩ
50 %
Q10
Q39
MJE15032G
2N5551
R14
330Ω
R15
330Ω
R25
10Ω
C8
220µF
R24
2.2kΩ
Q6
MJE13003
R23
720Ω
R35
500Ω
Key=A
C7
10µF
R33
56kΩ
R22
33Ω
R21
33Ω
Q13
MJL4281AG
Q12
MJL4302AG
V1
120 V
V2
120 V
C12
10mF
C11
10mF
R27
10Ω
R28
10Ω
C9
220µF
R26
10Ω
Q15 MJL4281AG
Q16 MJL4281AG
Q17 MJL4281AG
Q18 MJL4281AG
Q30 MJL4281AG
Q31 MJL4281AG
Q32 MJL4281AG
Q33 MJL4281AG
Q34 MJL4281AG
Q35 MJL4281AG
Q36 MJL4281AG
Q37 MJL4281AG
Q14 MJL4302AG
Q19 MJL4302AG
Q20 MJL4302AG
Q21 MJL4302AG
Q22 MJL4302AG
Q23 MJL4302AG
Q24 MJL4302AG
Q25 MJL4302AG
Q26 MJL4302AG
Q27 MJL4302AG
Q28 MJL4302AG
Q29 MJL4302AG
R29 0.33Ω
R58 10Ω
R36 0.33Ω
R59 10Ω
R37 0.33Ω
R60 10Ω
R38 0.33Ω
R61 10Ω
R50 0.33Ω
R62 10Ω
R51 0.33Ω
R63 10Ω
R52 0.33Ω
R64 10Ω
R53 0.33Ω
R65 10Ω
R54 0.33Ω
R66 10Ω
R55 0.33Ω
R67 10Ω
R56 0.33Ω
R68 10Ω
R57 0.33Ω
R30 0.33Ω
R69 10Ω
R39 0.33Ω
R70 10Ω
R40 0.33Ω
R71 10Ω
R41 0.33Ω
R72 10Ω
R42 0.33Ω
R73 10Ω
R43 0.33Ω
R74 10Ω
R44 0.33Ω
R75 10Ω
R45 0.33Ω
R76 10Ω
R46 0.33Ω
R77 10Ω
R47 0.33Ω
R78 10Ω
R48 0.33Ω
R79 10Ω
R49 0.33Ω
XMM1
XDA1
XMM1
L1
1µH
R31
10Ω
R34
8Ω
C10
100nF
R32
10Ω
XSC2
Tektronix