CN50 AC Power Adapter(3273)

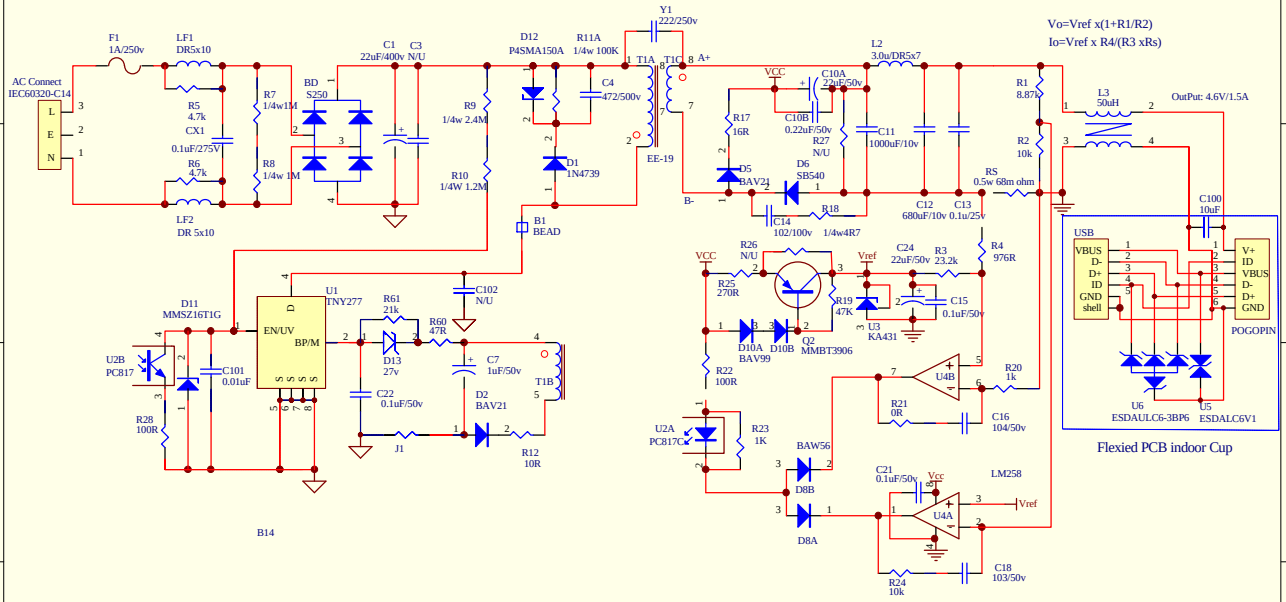

Notce: ICC confidential document

International Components Corporation TM		
Title :CN50 AC Power Adapter(3273)		Revision: B14
		Draw BY: Jason
Project No:	Sheet: 1 of 1	Check BY: XJJ
B13	Date: Aug/31/2010	Approved By: KW