LTR	DESCRIPTION	DATE	APPROVAL
A	RELEASED PER ECO	09/24/04	GB
B	RELEASED PER ECO 7959	03/10/05	SN
C	RELEASED PER ECO 8346	02/21/06	AJ
C	ADD ICC PN	06/30/11	WY

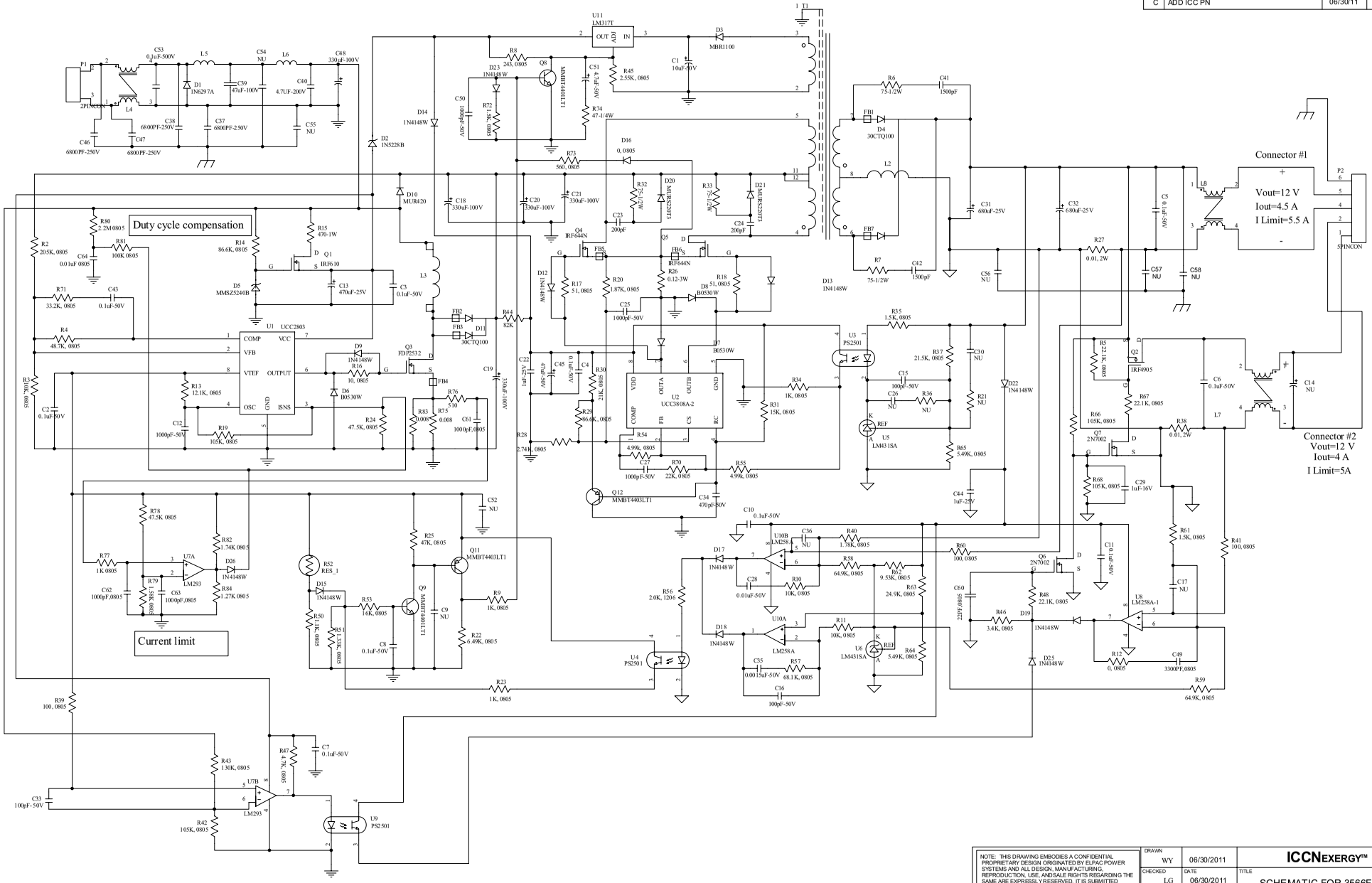

NOTE: THIS DRAWING EMBODIES A CONFIDENTIAL PROPRIETARY DESIGN ORIGINATED BY ELPAC POWER SYSTEMS AND ALL DESIGN, MANUFACTURING, REPRODUCTION, USE, AND SALE RIGHTS REGARDING THE SAME ARE EXPRESSLY RESERVED. IT IS SUBMITTED UNDER CONFIDENTIAL RELATIONSHIP FOR A SPECIFIC PURPOSE, AND THE RECIPIENT AGREES BY ACCEPTING THIS DRAWING NOT TO SUPPLY OR DISCLOSE ANY INFORMATION REGARDING IT TO ANY UNAUTHORIZED PERSON, OR TO INCORPORATE IN OTHER DISIGNS ANY DESIGN FEATURES NOT TO BE DERIVED ALL DATA

DRAWN WY	06/30/2011	ICCNEXERGY™
CHECKED LG	DATE 06/30/2011	TITLE SCHEMATIC FOR 3566F&3819F
APPROVED TERRY	DATE 06/30/2011	SIZE B · ICC PN 95476-133 · ELPAC PN F501-200073 · REV. C
APPROVED	DATE	DATE: · SHEET 1 OF 1