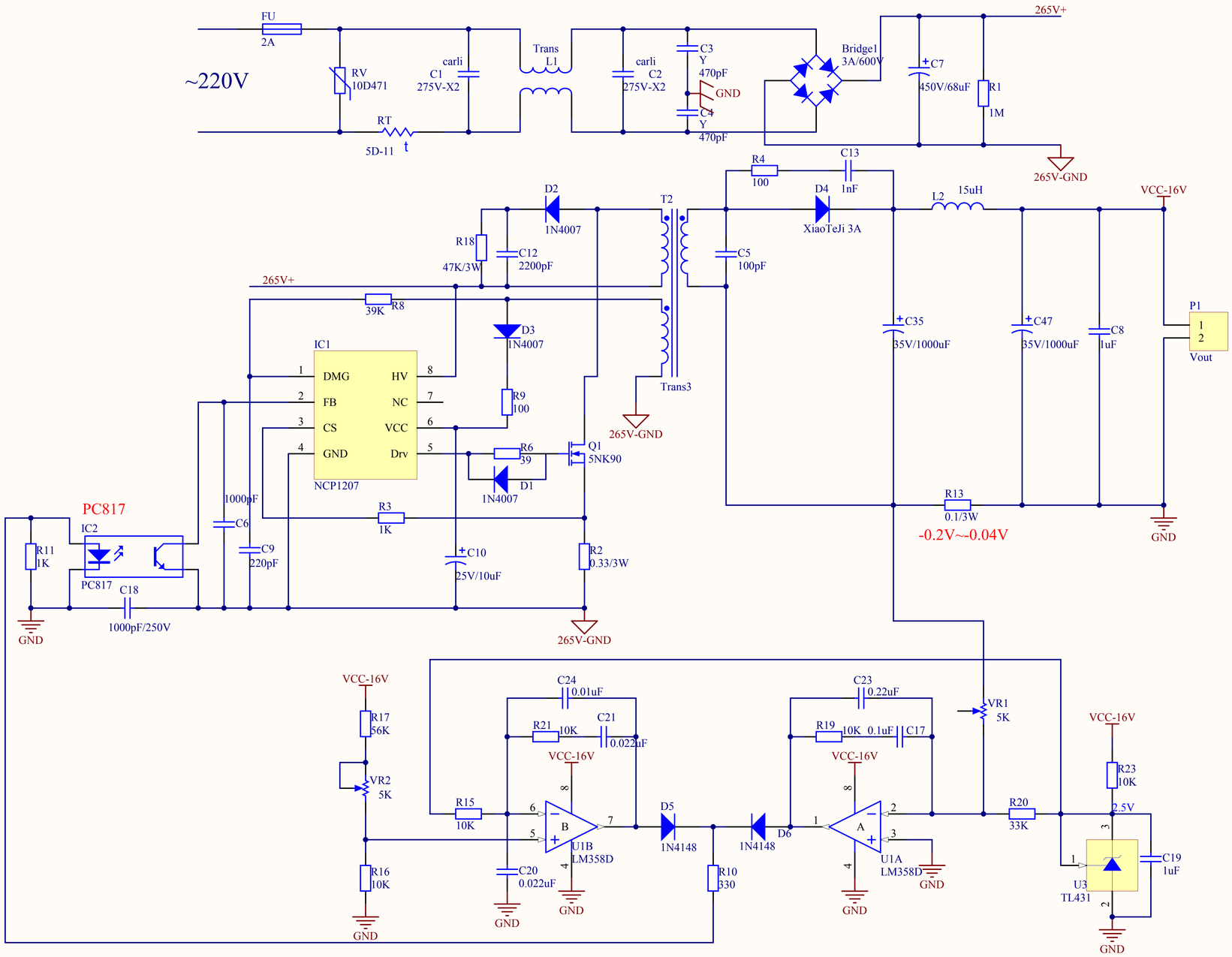

Title		
Size B	Number	Revision
Date: 2012-11-1		Sheet of
File: D:\ \..\CDQZY.SCHDOC		Drawn By: