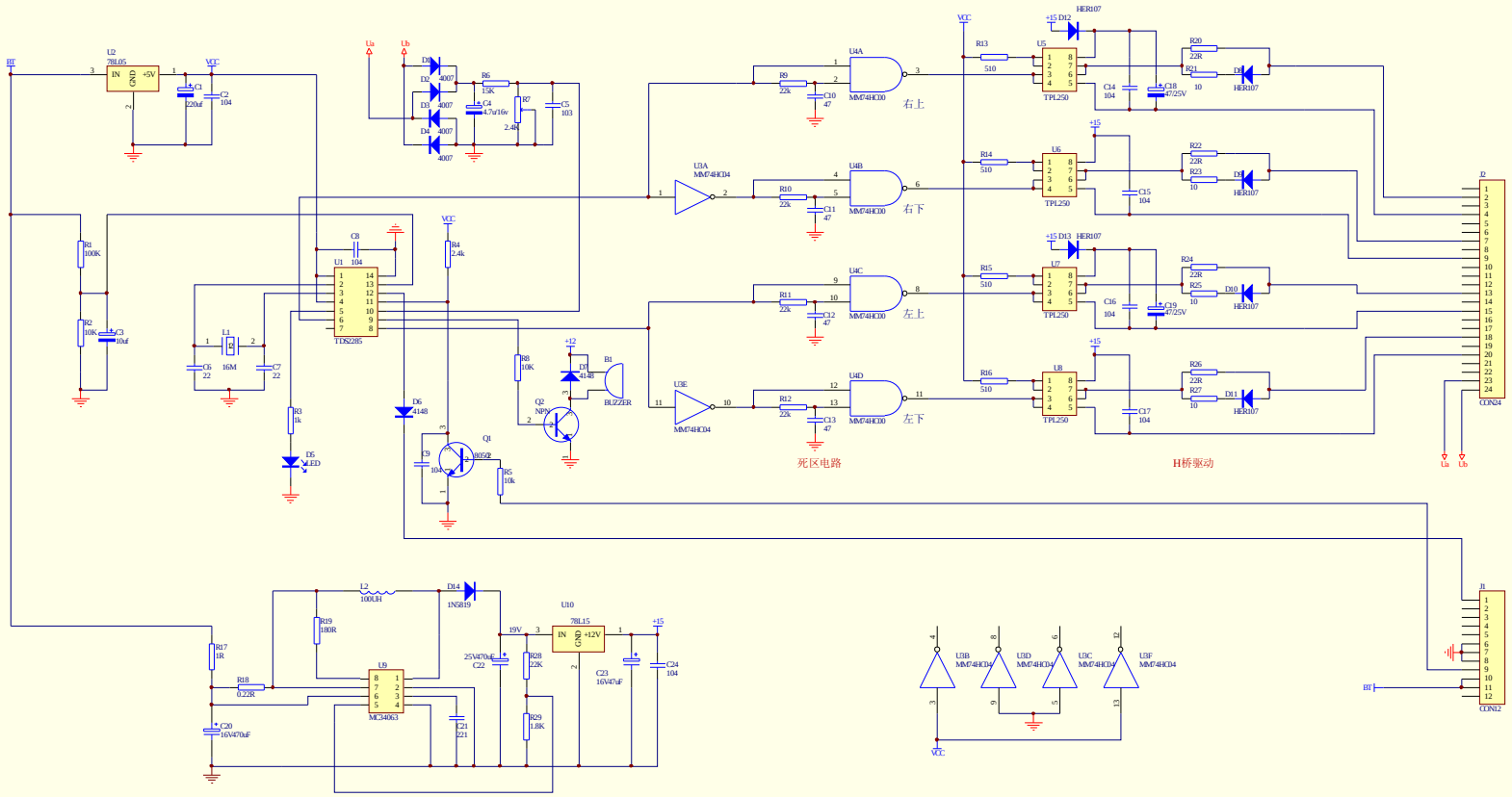

Title		
Size B	Number	Revision
Date: 4-Jun-2010	Sheet of	
File: 4级防五档退出600W正弦逆变器600W正弦逆变器.sch	Drawn By:	