File No	DL-ML75V-PV-01 A0

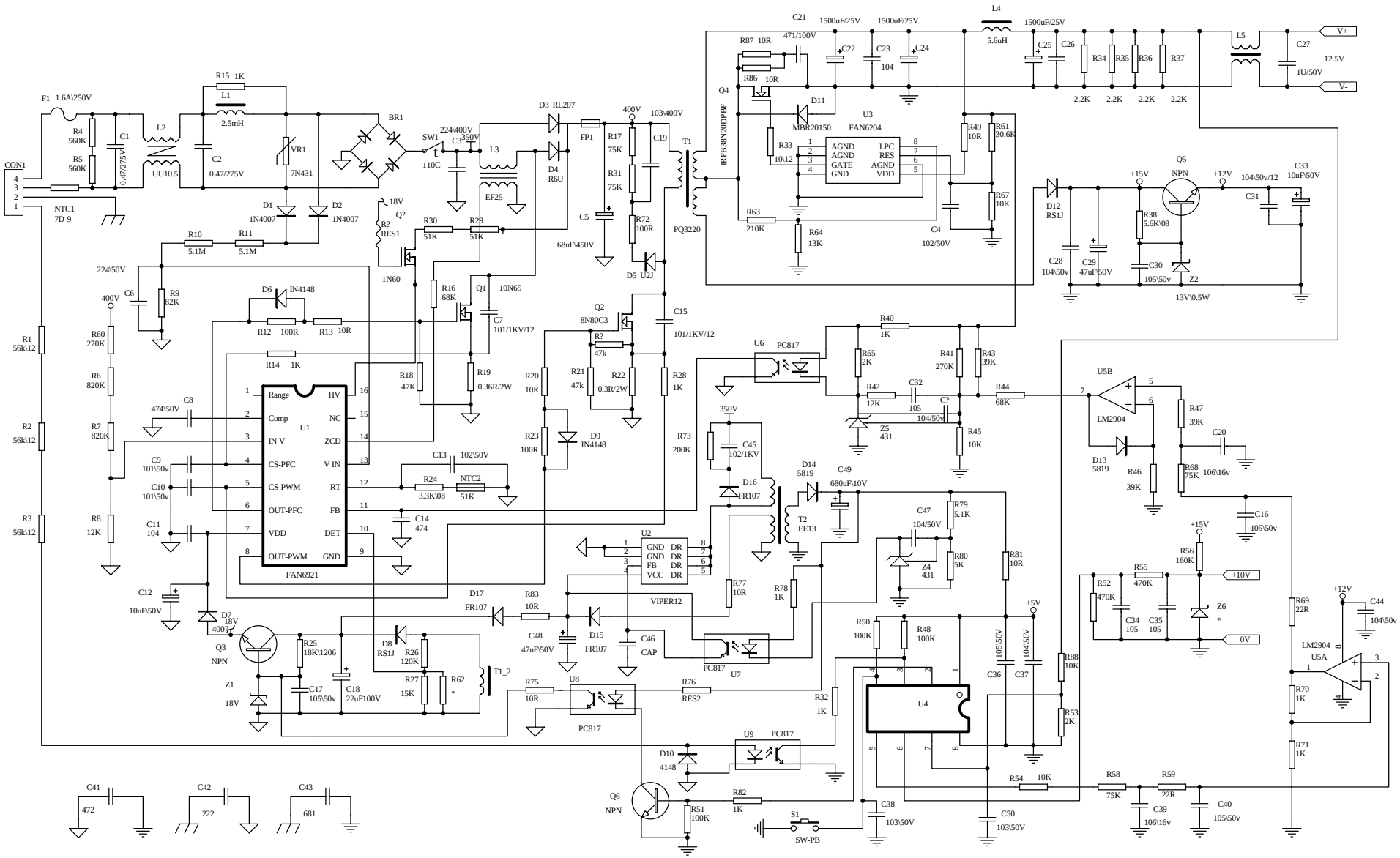

No	Change Describe	Designer/Date	Reviewer/Date	Approved/Date

Designer:	Date:	Hydrim Electronics Co., Ltd.	
Reviewer:	Date:	Model: ML75V-PV	Version: A0
Approved:	Date:	Units: mm	Title:
Material:	Thickness:	Page:	Color:
Dimension:		Stock Number	