SD4833

POWER MOSFET

Description

The SD4833 is 195A N-Channel enhancement mode silicon gate power MOSFET uses advanced trench technology and to provide excellent $R_{DS(ON)}$ with low gate charge. This device is suitable for use in PWM, load switching, computer and general purpose applications.

Simplified Schematic

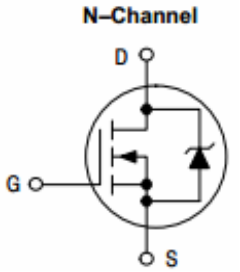

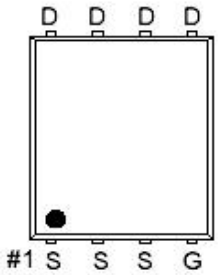

RoHS Compliant

G. GATE
D. DRAIN
S. SOURCE

Features

- Pb-freee
- Fast switching capability
- V_{DS}(V)=30V
- $R_{DS(ON)}$=2mΩ @ V_{GS}=10V
- BV_{DSS}=30V
- I_D=195A

Maximum Ratings T_A=25℃ unless otherwise specified

Characteristic	Symbol	Value	Units
Drain-Source Voltage	V_{DS}	30	V
Gate-Source Voltage	V_{GSS}	±20	V
Continuous Drain Current, V_{GS}@10V	I_D	T_C=25℃： 65 T_C=100℃： 65	A
Pulsed Drain Current	I_{DM}	300	A
Total Power Dissipation	P_D	T_C=25℃： 2.5 Linear Derating Factor: 0.5W/℃	W
Single Pulse Avalanche Energy	E_{AS}	480	mJ
Storage Temperature Range	T_{STG}	-55 to 175	℃
Operating Junction Temperature Range	T_J	-55 to 150	℃

Thermal Characteristics

Characteristic	Symbol	Value	Units
Maximum Thermal Resistance, Junction-case	Rthj-c	3	℃/W
Maximum Thermal Resistance, Junction-ambient(PCB mount)	Rthj-a	45	℃/W

Electrical Characteristics T_J=25℃ unless otherwise specified

Characteristic	Symbol	Min	Typ	Max	Unit	Test Condition
Drain-Source Breakdown Voltage	BV_{DSS}	30			V	V_{GS}=0V, I_D=250μA
Static Drain-Source On-Resistance	$R_{DS(ON)}$		1.6 2.8	2 3.2	mΩ	V_{GS}=10V, I_D=30A V_{GS}=4.5V, I_D=20A
Gate Threshold Voltage	$V_{GS(th)}$	1		3	V	V_{DS}=V_{GS}, I_D=250μA
Forward Transconductance	g_{fss}		28		s	V_{DS}=10V, I_D=30A
Zero Gate Voltage Drain Current	I_{DSS}			1	μA	V_{DS}=25V, V_{GS}=0V
Gate-Body Leakage Current	I_{GSS}			± 100	nA	V_{GS}=±20V
Total Gate Charge	Q_G			64	nC	Q_g(10V): V_{GS}=10V, V_{DS}=12.5V, I_D=20A
Gate-Source Charge	Q_{GS}		18		nC	V_{GS}=10V,V_{DS}=12.5V, I_D=20A
Gate-Drain Charge	Q_{GD}		6.8		nC	V_{DS}=12.5V, V_{GS}=10V, I_D=20A
Turn-On Delay Time	$t_{D(ON)}$		24		ns	V_{DS}=12.5V,I_D=20A, R_G=3Ω,R_L=0.6Ω
Rise Time			36		ns	V_{DS}=12.5V, I_D=20A, R_G=3Ω, R_L=0.6Ω
Turn-Off Delay Time	$t_{D(off)}$		19		ns	V_{GS}=10V, V_{DS}=12.5V, R_L=0.68Ω,R_{GEN}=3Ω
Fall Time	t_f		18		ns	V_{GS}=10V, V_{DS}=12.5V, R_L=0.68Ω,R_{GEN}=3Ω
Input Capacitance	C_{ISS}		4960		pF	V_{DS}=12.5V,V_{GS}=0V, f=1MHz
Output Capacitance	C_{OSS}		1320		pF	V_{DS}=12.5V,V_{GS}=0V, f=1MHz
Reverse Transfer Capacitance	C_{RSS}		680		pF	V_{DS}=12.5V,V_{GS}=0V, f=1MHz
Gate Resistance	R_g		0.68	1	Ω	f=1MHz

Source-Drain Diode

Characteristic	Symbol	Min	Typ	Max	Unit	Test Condition
Forward On Voltage	Vsd			1.2	V	I_S=20A, V_{GS}=0V
Reverse Recovery Time	Trr		39		ns	I_S=20A, V_{GS}=0V
Reverse Recovery Charge	Qrr		42		nC	dI_{SD}/dt=100A/μs

SD4833 TYPICAL CHARACTERISTICS

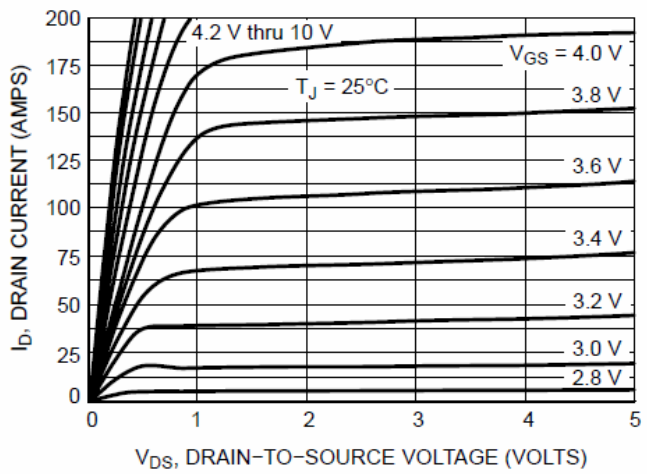

Figure 1. On−Region Characteristics

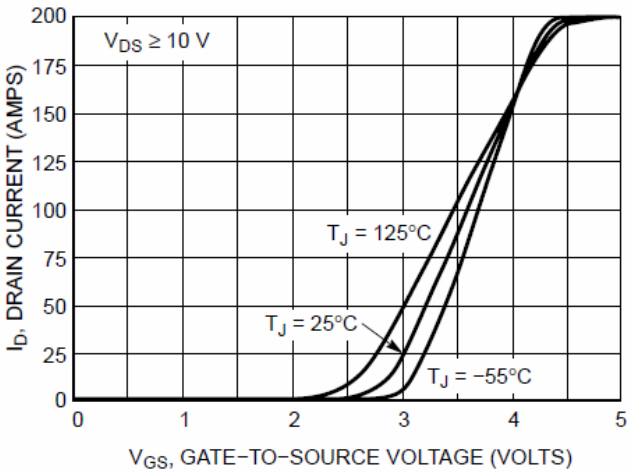

Figure 2. Transfer Characteristics

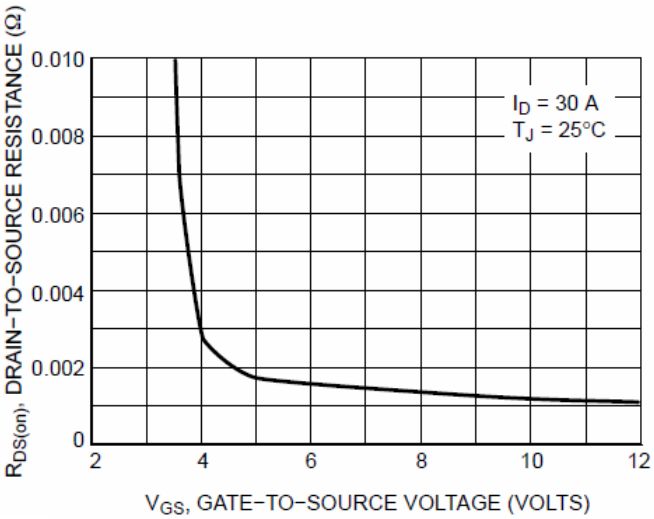

Figure 3. On−Resistance vs. Gate−to−Source Voltage

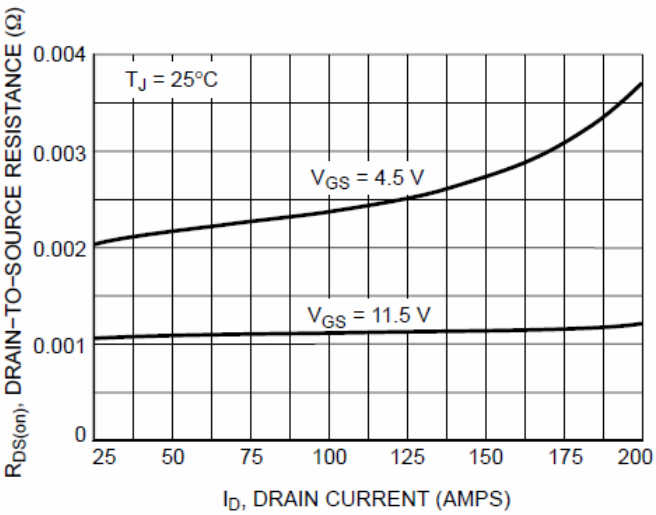

Figure 4. On−Resistance vs. Drain Current and Gate Voltage

TEST CIRCUIT 1 AVALANCHE CAPABILITY

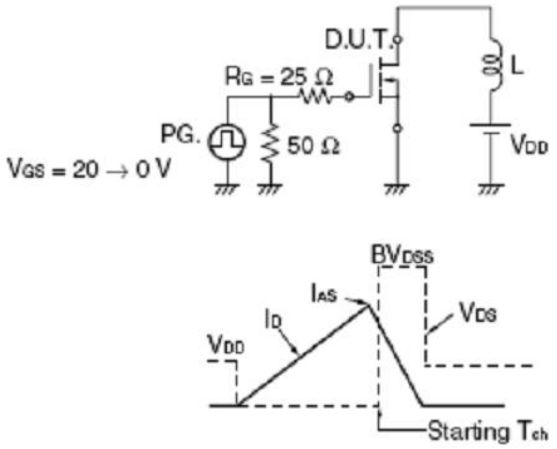

TEST CIRCUIT 1 SWITCHING TIME

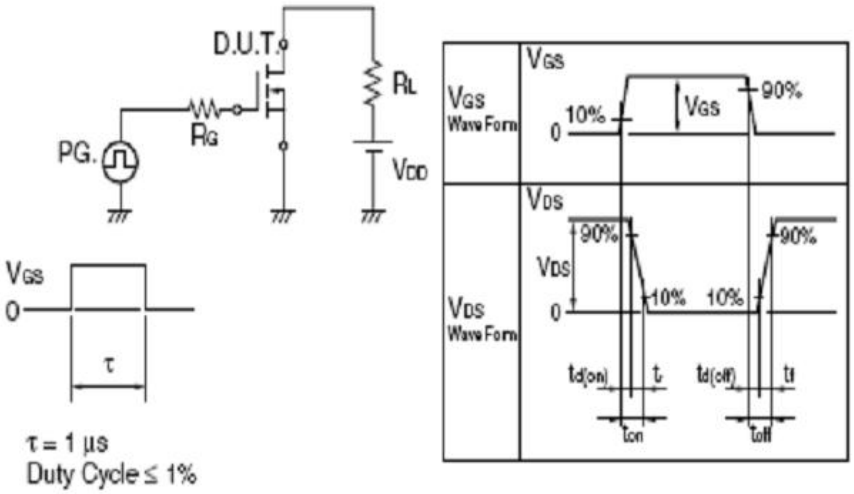

TEST CIRCUIT 3 GATE CHARGE

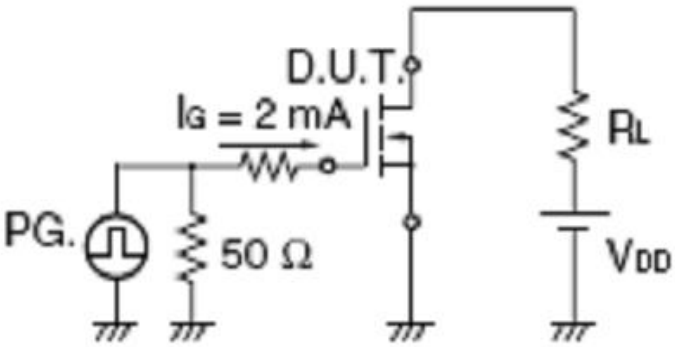

Package Dimension

PDFN 5x6P MECHANICAL DATA

Dimension	mm			Dimension	mm		
	Min.	Typ.	Max.		Min.	Typ.	Max.
A	4.8	4.9	5.1	I	0.35	0.53	0.71
B	5.7	5.75	5.825	J	3.34	3.56	3.78
C	5.9	6.0	6.1	K	1.1		
D	0.33	0.41	0.51	L	0.350	0.61	0.72
E		1.27		M	8°	10°	12°
F	0.8	1.0	1.2	N			5.3
G	0.17	0.25	0.34	O	0.05	0.1	0.20
H	3.67	3.85	4.02	P			0.1

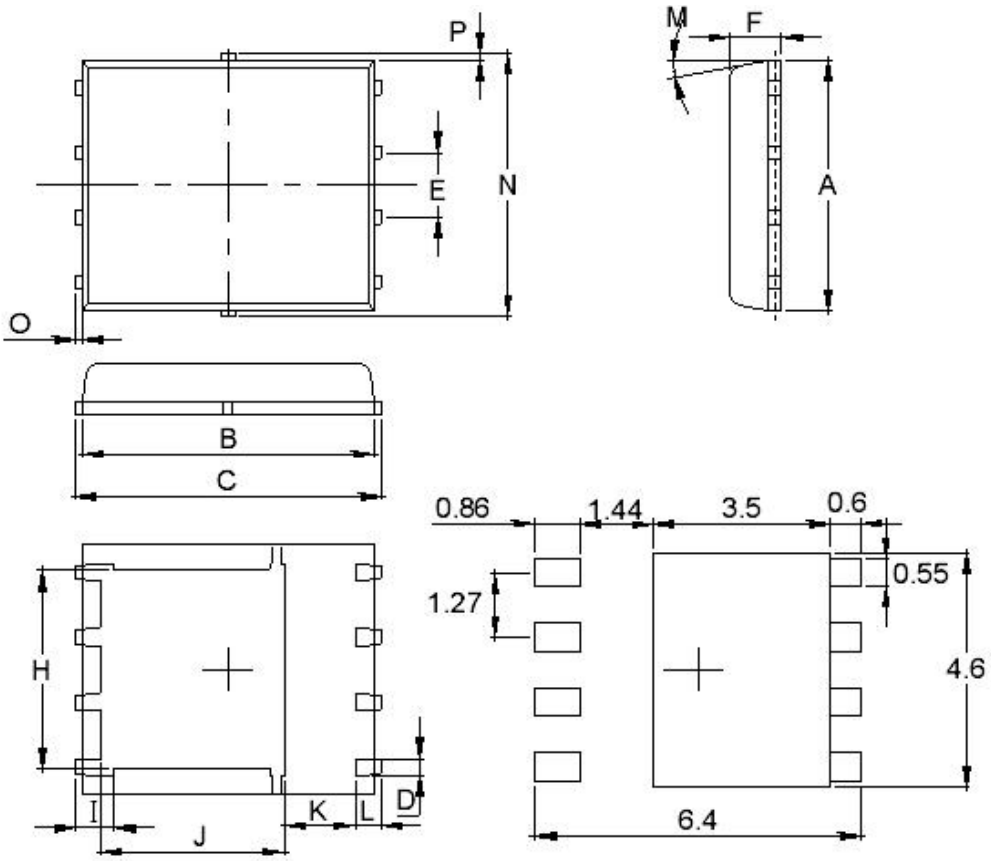

ORIGINAL

BLANK

IMPORTANT NOTICE

Sunsigns assumes no responsibility for equipment failures that result from using products at values that exceed, even momentarily, rated values(such as maximum ratings, operating condition ranges, or other parameters) listed in products specifications of any and all Sunsigns products described or contained herein. Sunsigns products are not designed for use in life support appliances, devices or systems where malfunction of these products can be reasonably expected to result in personal injury. Reproduction in whole or in part is prohibited without the prior written consent of the copyright owner. The information presented in this document does not form part of any quotation or contract, is believed to be accurate and reliable and may be changed without notice.