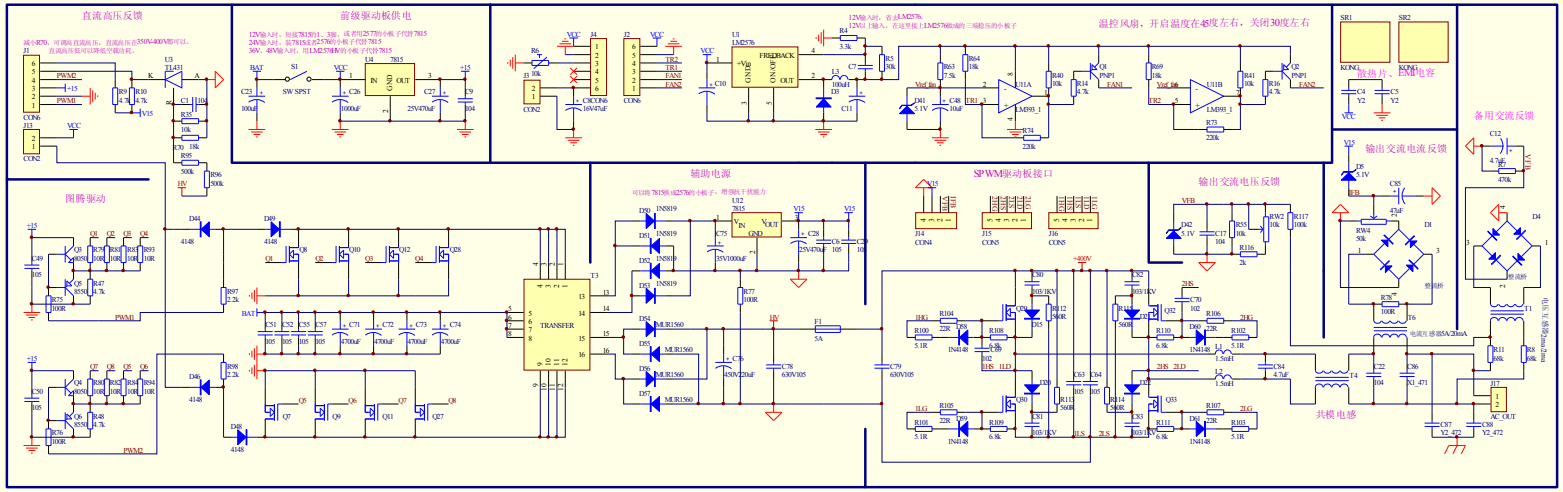

Title		
Size C	Number	Revision
Date: 30-Dec-2012		Sheet of
File: E:\我的项目\12.2\逆变电路逆变.ddb		Drawn By: