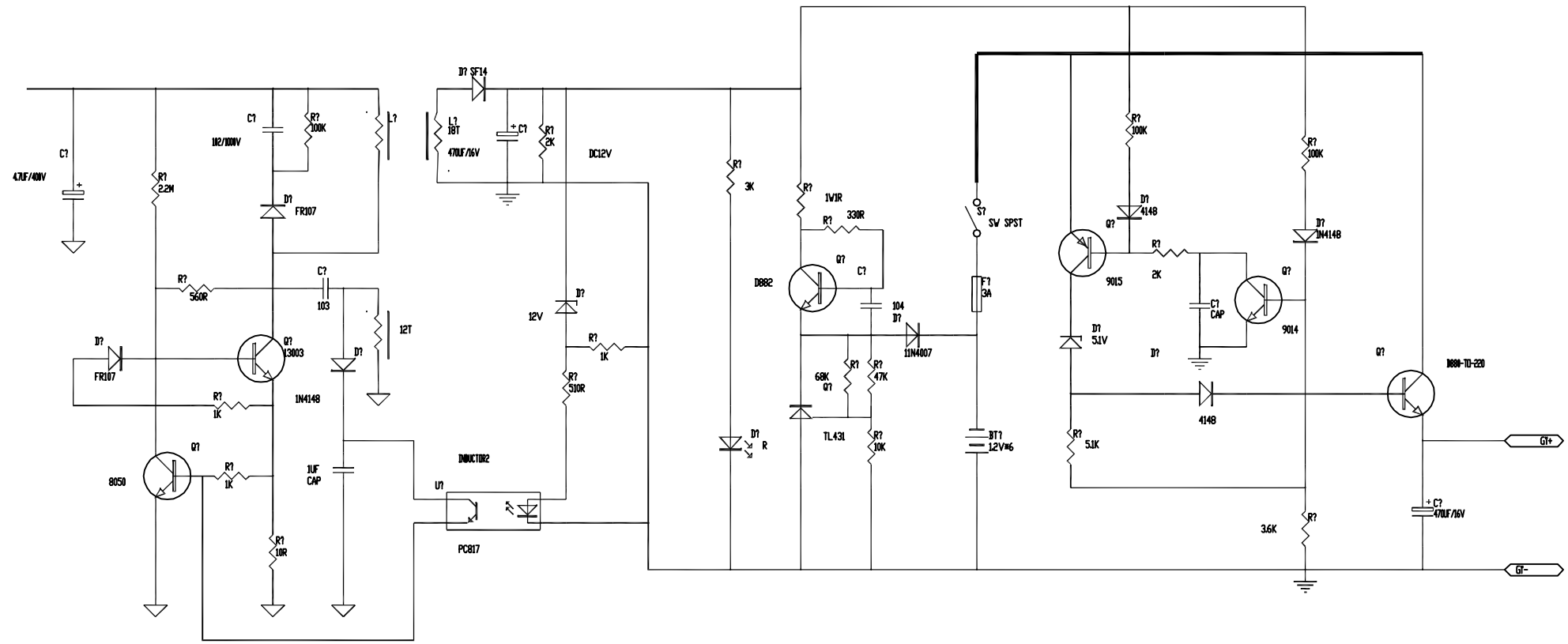

Title		
Size B	Number	Revision
Date: 25-Sep-2014		Sheet of
File: C:\PROGRAM FILES\PROTEL 99SE\TM\EXAMPLES\Mag-127.DDB		Drawn By: