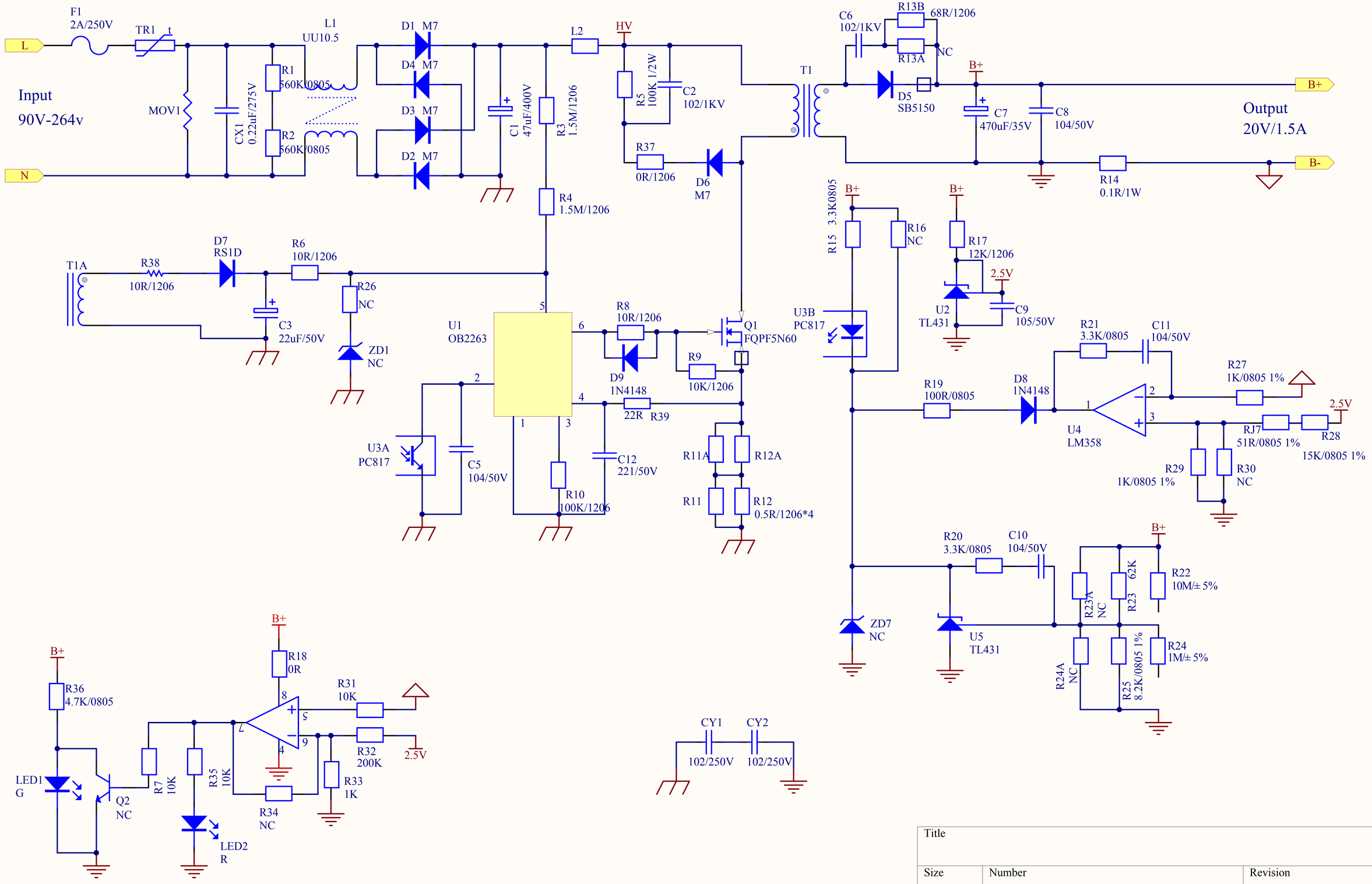

Title		
Size A4	Number	Revision
Date: 2013-12-20		Sheet of
File: E:\ \..\HYCH0302001500G 2012.05.04.SCH		Drawn By: