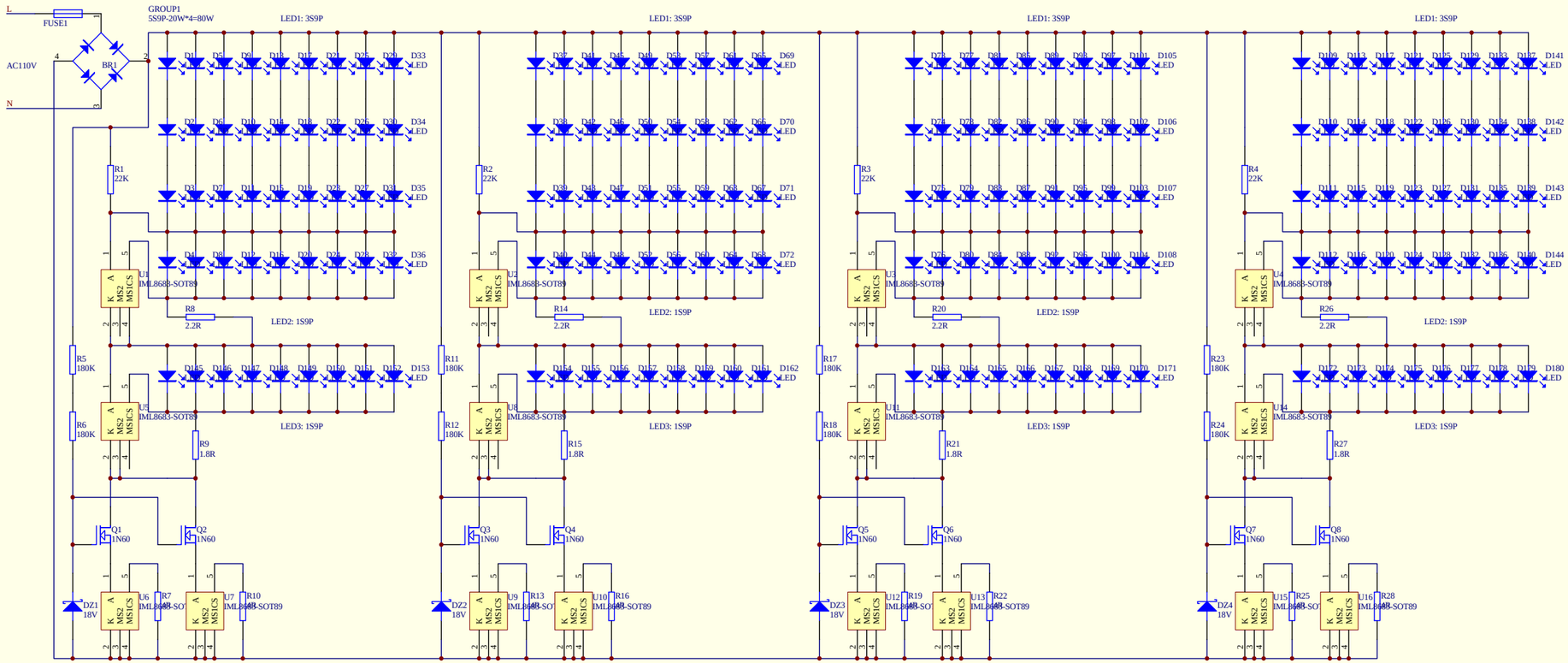

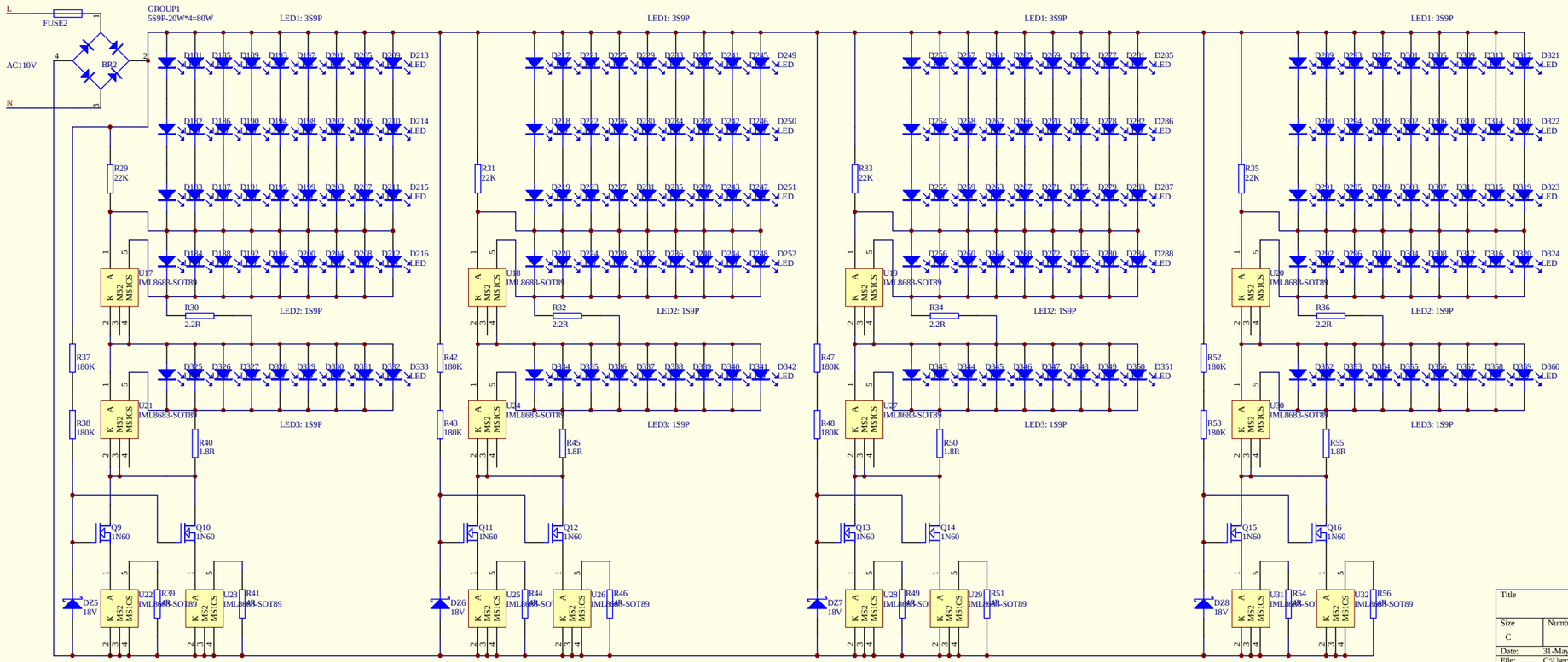

Title		
Size C	Number	Revision
Date: 31-May-2014		Sheet of
File: C:\Users\acer\Desktop\lily\05261501.ddb		Drawn By: