2. Schematic

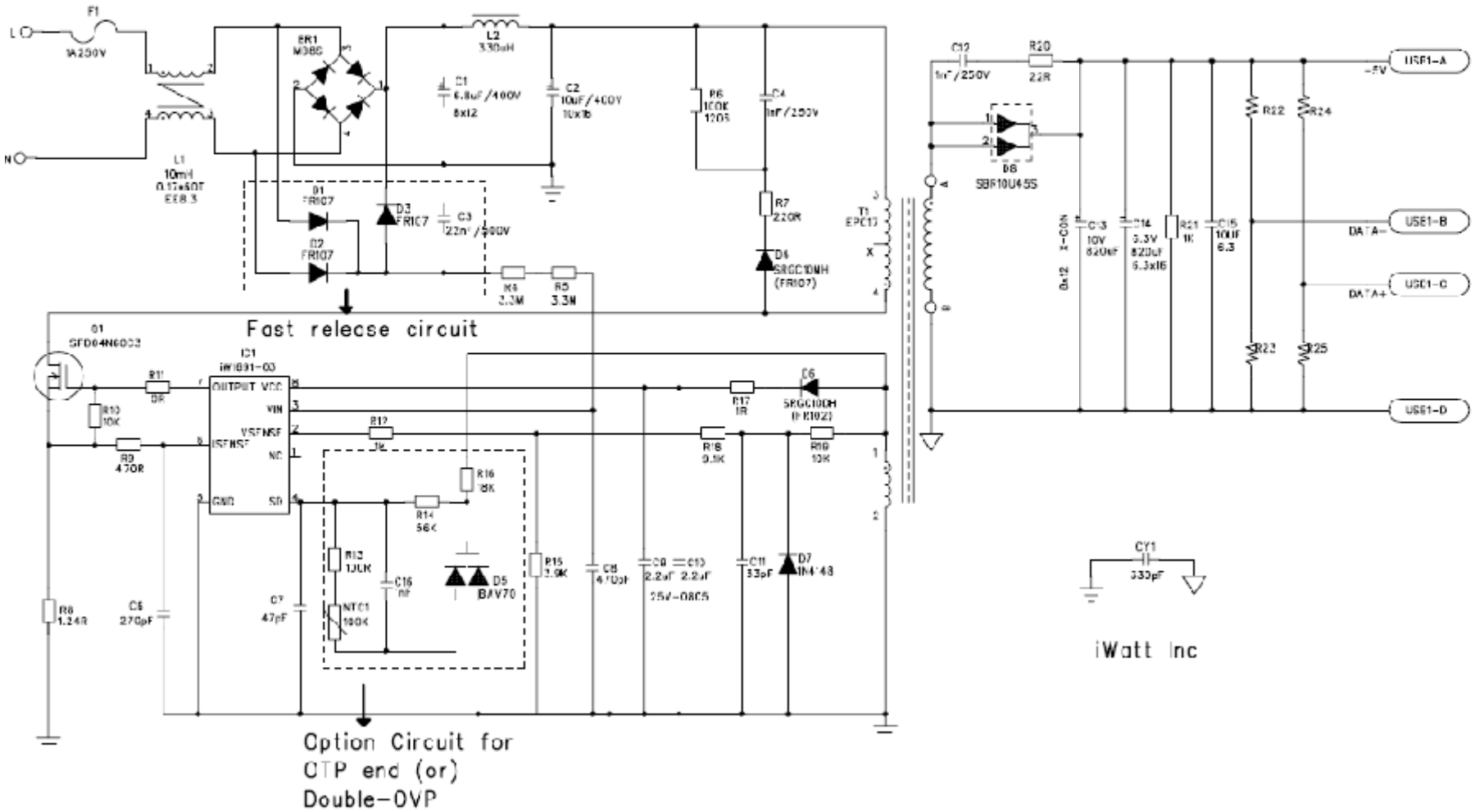
Fast relecse circuit
Option Circuit for
CTP end (or)
Double-OVP
iWatt Inc