PRODUCT SELECTOR GUIDE

ENABLING SMALL, LIGHTWEIGHT, COST-EFFECTIVE, AND ENERGY EFFICIENT POWER SUPPLIES FOR A BROAD RANGE OF APPLICATIONS

POWER INTEGRATIONS, INC.®

INNOVATION IN POWER CONVERSION

Sept. 2002

Design Simplification

- Eliminates up to 50 discrete components
- Integrated functions include high-voltage MOSFET switch, controller, high-voltage start-up, short-circuit and open-loop protection, programmable current limit, line under-voltage/overvoltage protection, thermal shutdown, soft-start, feedback compensation, and remote on/off on a single chip

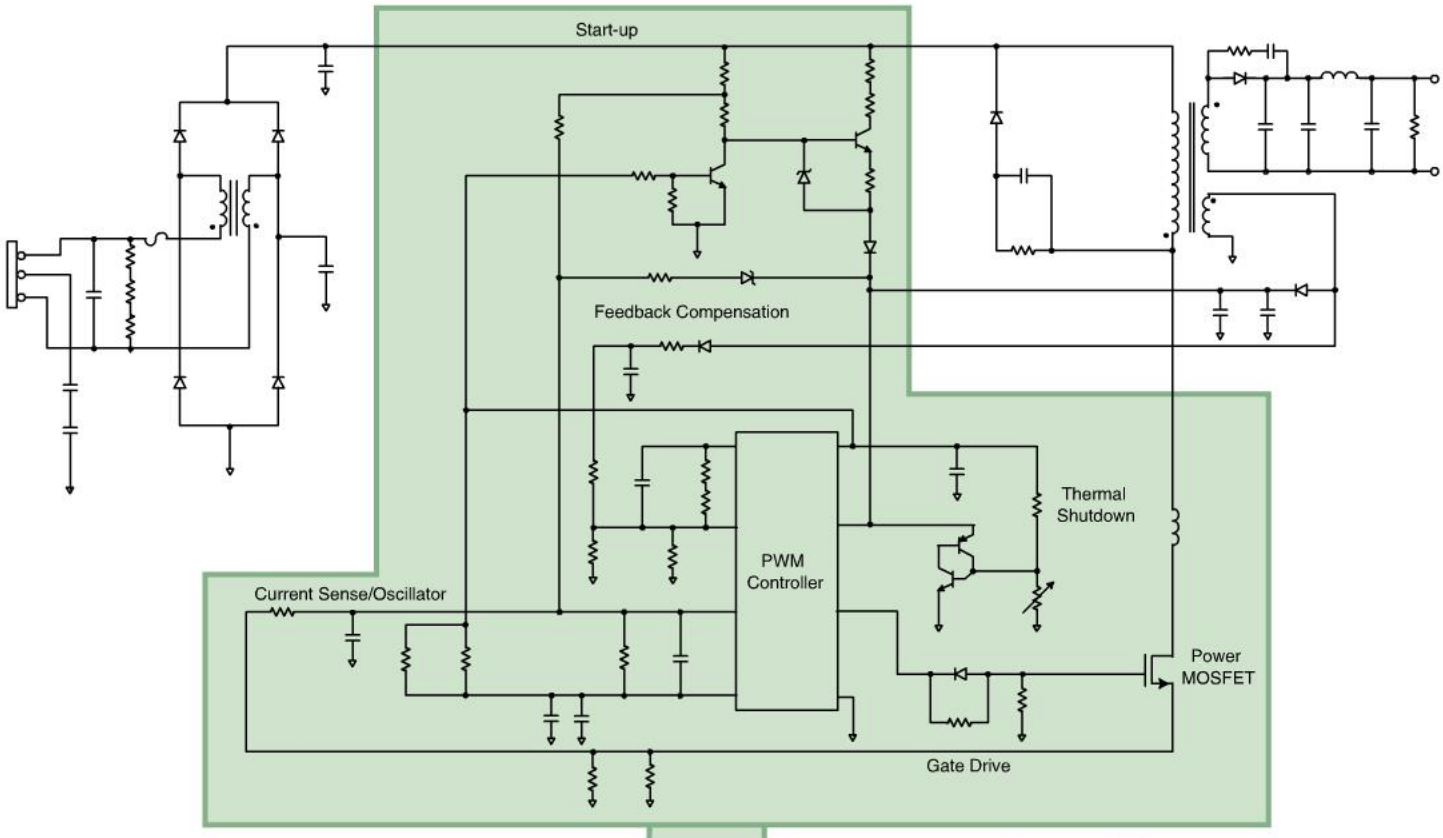

TYPICAL DISCRETE PWM IMPLEMENTATION

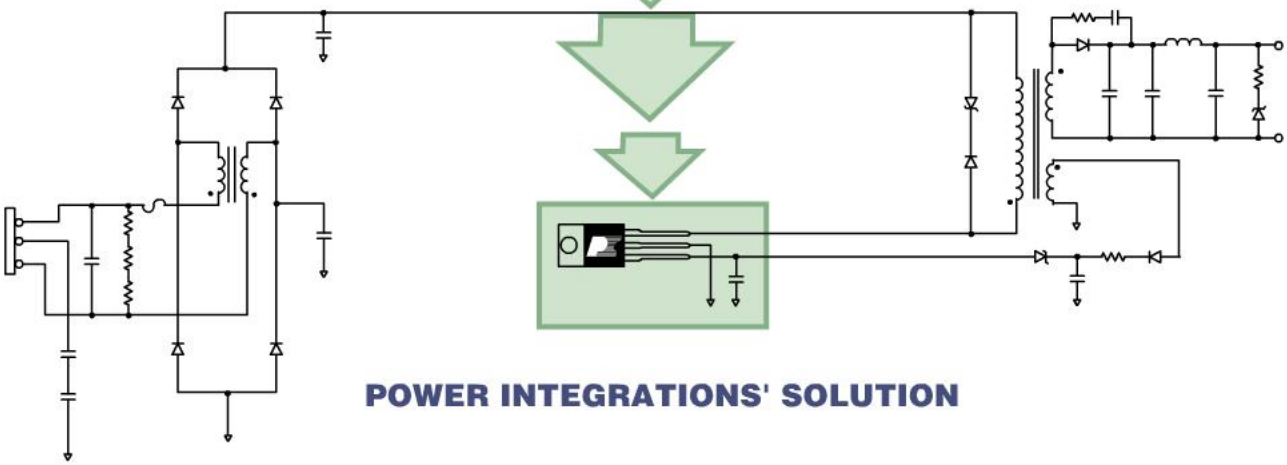

POWER INTEGRATIONS' SOLUTION

Product Selector Guide

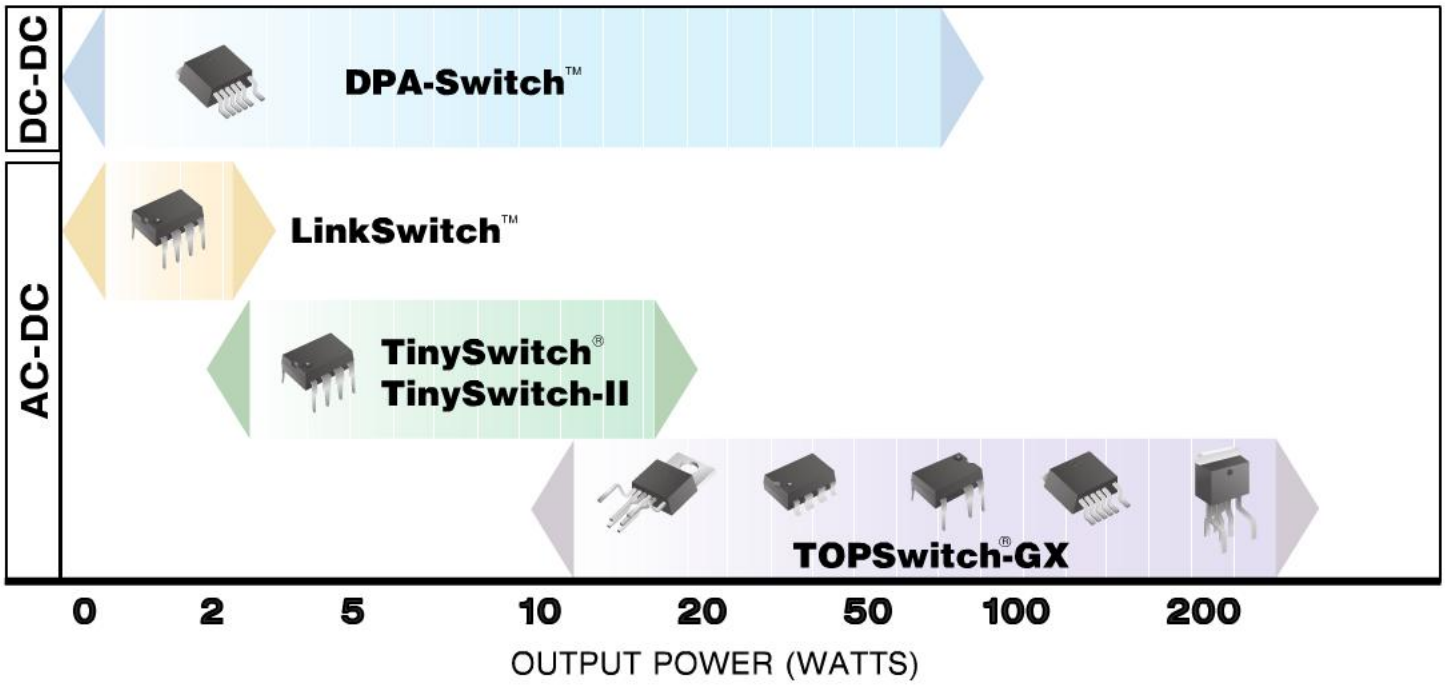

Start
AC-DC Converter or DC-DC Converter

Identify Power Supply Requirements
- Input Voltage Range:_____ V (AC or DC)
- Total Output Power:_____ W

For Mulitple Outputs:
Output Voltage x Output Current = Output Power
(V) (A) (W)

Is converter **DC-DC** and ≤100 W @ 16-75 VDC input? — Y → DPA-Switch™; N →

Is converter **AC-DC** and ≤290 W @ 230 V or ≤210 W @ 85-265 V input? — Y → Is converter **AC-DC** and ≤4 W @ 230 V or ≤3 W @ 85-265 V input?; N →

Is converter **AC-DC** and ≤4 W @ 230 V or ≤3 W @ 85-265 V input? — Y → LinkSwitch™ / TinySwitch®-II; N →

Does supply need a low power bias or standby supply? — Y → Is converter **AC-DC** and ≤290 W @ 230 V or ≤210 W @ 85-265 V input?; N → **Not a Fit**

Is output power ≤23 W @ 230 V or ≤15 W @ 85-265 V input? — Y → TinySwitch®-II; N → TOPSwitch®-GX

DPA-Switch™
DC-DC

DPA423-426
- Design Kit: DAK-21
- Design Ideas
- AN-31 Application Note
- Engineering Reports
- Design Software: **PI Expert**™ CD-ROM

LinkSwitch™
AC-DC

LNK501
- Design Kit: DAK-16
- Design Ideas
- AN-35 Application Note
- Engineering Reports
- Design Software: **PI Expert** CD-ROM

TinySwitch®-II
AC-DC

TNY264-268
- Design Kits: DAK-7, 14
- Design Ideas
- Engineering Reports
- Energy Efficient Solutions Brochure
- Design Software: **PI Expert** CD-ROM

Note: Also consider lower switching frequency **TinySwitch** (TNY253-254) devices for video noise-sensitive applications (e.g. T.V. standby) in the 0 to 5 W range. Lower frequency accommodates heavier drain snubbing for lower video noise.

TOPSwitch®-GX
AC-DC

TOP242-250
- Design Kits: DAK-11, 12, 13 and 18
- Selection Curves: AN-29 Application Note
- Design Ideas
- Engineering Reports
- Energy Efficient Solutions Brochure
- Design Software: **PI Expert** CD-ROM

Product Selector Guide

I. HIGH POWER AC-DC POWER CONVERSION (UP TO 290 W)

Product[1,5]	Continuous Output Power		Continuous Output Power		HV-FET Rating	Switching Frequency (kHz)	Control Method	Self-Powered[4]	Soft-Start (Y-Yes; N.R.-Not Required)	Adjustable Current Limit	Auto Restart	Thermal Shutdown	Frequency Jitter	Power Limiting	Line UV Detection	Line OV Detection	Remote ON/OFF	EcoSmart® Low Standby/ No-Load Power Consumption	Max. Duty Cycle % (DC_{MAX})	Simultaneous Line Sensing and Current Limit
	Adapter[2]	Open Frame[3]	Adapter[2]	Open Frame[3]																
TOPSwitch-GX	**230 VAC ± 15%**		**85-265 VAC**																	
TOP242 P or G	9 W	15 W	6.5 W	10 W	700 V	132	PWM		Y	Y	Y	Hys.	Y	Y	Y	Y	Y	Y	78	
TOP242 R	21 W	22 W	11 W	14 W	700 V	132/66	PWM		Y	Y	Y	Hys.	Y	Y	Y	Y	Y	Y	78	Y
TOP242 Y or F	10 W	22 W	7 W	14 W	700 V	132/66	PWM		Y	Y	Y	Hys.	Y	Y	Y	Y	Y	Y	78	Y
TOP243 P or G	13 W	25 W	9 W	15 W	700 V	132	PWM		Y	Y	Y	Hys.	Y	Y	Y	Y	Y	Y	78	
TOP243 R	29 W	45 W	17 W	23 W	700 V	132/66	PWM		Y	Y	Y	Hys.	Y	Y	Y	Y	Y	Y	78	Y
TOP243 Y or F	20 W	45 W	15 W	30 W	700 V	132/66	PWM		Y	Y	Y	Hys.	Y	Y	Y	Y	Y	Y	78	Y
TOP244 P or G	16 W	30 W	11 W	20 W	700 V	132	PWM		Y	Y	Y	Hys.	Y	Y	Y	Y	Y	Y	78	
TOP244 R	34 W	50 W	20 W	28 W	700 V	132/66	PWM		Y	Y	Y	Hys.	Y	Y	Y	Y	Y	Y	78	Y
TOP244 Y or F	30 W	65 W	20 W	45 W	700 V	132/66	PWM		Y	Y	Y	Hys.	Y	Y	Y	Y	Y	Y	78	Y
TOP245 R	37 W	57 W	23 W	33 W	700 V	132/66	PWM		Y	Y	Y	Hys.	Y	Y	Y	Y	Y	Y	78	Y
TOP245 Y or F	40 W	85 W	26 W	60 W	700 V	132/66	PWM		Y	Y	Y	Hys.	Y	Y	Y	Y	Y	Y	78	Y
TOP246 R	40 W	64 W	26 W	38 W	700 V	132/66	PWM		Y	Y	Y	Hys.	Y	Y	Y	Y	Y	Y	78	Y
TOP246 Y or F	60 W	125 W	40 W	90 W	700 V	132/66	PWM		Y	Y	Y	Hys.	Y	Y	Y	Y	Y	Y	78	Y
TOP247 R	42 W	70 W	28 W	43 W	700 V	132/66	PWM		Y	Y	Y	Hys.	Y	Y	Y	Y	Y	Y	78	Y
TOP247 Y or F	85 W	165 W	55 W	125 W	700 V	132/66	PWM		Y	Y	Y	Hys.	Y	Y	Y	Y	Y	Y	78	Y
TOP248 R	43 W	75 W	30 W	48 W	700 V	132/66	PWM		Y	Y	Y	Hys.	Y	Y	Y	Y	Y	Y	78	Y
TOP248 Y or F	105 W	205 W	70 W	155 W	700 V	132/66	PWM		Y	Y	Y	Hys.	Y	Y	Y	Y	Y	Y	78	Y
TOP249 R	44 W	79 W	31 W	53 W	700 V	132/66	PWM		Y	Y	Y	Hys.	Y	Y	Y	Y	Y	Y	78	Y
TOP249 Y or F	120 W	250 W	80 W	180 W	700 V	132/66	PWM		Y	Y	Y	Hys.	Y	Y	Y	Y	Y	Y	78	Y
TOP250 R	45 W	82 W	32 W	55 W	700 V	132/66	PWM		Y	Y	Y	Hys.	Y	Y	Y	Y	Y	Y	78	Y
TOP250 Y or F	135 W	290 W	90 W	210 W	700 V	132/66	PWM		Y	Y	Y	Hys.	Y	Y	Y	Y	Y	Y	78	Y

II. LOW POWER AC-DC POWER CONVERSION (UP TO 23 W)

TinySwitch-II	**230 VAC ± 15%**		**85-265 VAC**																	
TNY264 P or G	5.5 W	9 W	4 W	6 W	700 V	132	ON/OFF	Y	N.R.		Y	Hys.	Y	Y	Y		Y	Y	65	
TNY266 P or G	10 W	15 W	6 W	9.5 W	700 V	132	ON/OFF	Y	N.R.		Y	Hys.	Y	Y	Y		Y	Y	65	
TNY267 P or G	13 W	19 W	8 W	12 W	700 V	132	ON/OFF	Y	N.R.		Y	Hys.	Y	Y	Y		Y	Y	65	
TNY268 P or G	16 W	23 W	10 W	15 W	700 V	132	ON/OFF	Y	N.R.		Y	Hys.	Y	Y	Y		Y	Y	65	
TinySwitch	**230 VAC ± 15%**		**85-265 VAC**																	
TNY253 P or G	4 W		2 W		700 V	44	ON/OFF	Y	N.R.			Hys.		Y			Y	Y	68	
TNY254 P or G	5 W		4 W		700 V	44	ON/OFF	Y	N.R.			Hys.		Y			Y	Y	68	
TNY255 P or G	10 W		6.5 W		700 V	130	ON/OFF	Y	N.R.			Hys.		Y			Y	Y	68	

III. VERY LOW POWER AC-DC LINEAR TRANSFORMER REPLACEMENT (≤4 W)

LinkSwitch	**230 VAC ± 15%**		**85-265 VAC**																	
LNK501 P or G	4 W		3 W		700 V	42	PWM		Y		Y	Hys.		Y				Y	77	

Product Selector Guide

IV. 24 V/48 V DC-DC POWER CONVERSION (UP TO 100 W)

Product[1,5]	Device Total Power Dissapation[6]					Max Output Power	HV-FET Rating	Switching Frequency (kHz)	Synchronizable to Lower External Clock Frequency	Control Method	Soft-Start (Y-Yes; N.R.-Not Required)	Fully Integrated Current Sensing	Adjustable Current Limit	Auto Restart	Thermal Shutdown	Power Limiting	Line UV Detection	Line OV Detection	Remote ON/OFF	EcoSmart® Low Standby/ No-Load Power Consumption	Max. Duty Cycle % (DC_{MAX})	Simultaneous Line Sensing and Current Limit
	0.5 Watts	1 Watt	2.5 Watts	4 Watts	6 Watts																	
DPA-Switch	**36-75 VDC INPUT[7,8]**																					
DPA423R	12 W	16 W	—	—	—	18 W	200 V	400/300	Y	PWM	Y	Y	Y	Y	Hys.	Y	Y	Y	Y	Y	75	Y
DPA424R	16 W	23 W	35 W	—	—	35 W	200 V	400/300	Y	PWM	Y	Y	Y	Y	Hys.	Y	Y	Y	Y	Y	75	Y
DPA425R	23 W	32 W	50 W	62 W	—	70 W	200 V	400/300	Y	PWM	Y	Y	Y	Y	Hys.	Y	Y	Y	Y	Y	75	Y
DPA426R	25 W	35 W	55 W	70 W	83 W	100 W	200 V	400/300	Y	PWM	Y	Y	Y	Y	Hys.	Y	Y	Y	Y	Y	75	Y

Notes:

1. Packages: P–Plastic DIP, G–Surface Mount DIP, Y–TO-220, R–TO-263, F–TO-262. **2**. Typical continuous power in a non-ventilated encased adapter with minimal heat sinking, measured at an ambient of 50 °C. **3**. Maximum continuous power in an open frame with adequate heat sinking, measured at an ambient of 50 °C. **4**. No bias winding needed. **5**. Shipping quantities per package: Tubes: F and Y- 50 pc., P and G - 50 pc. Tape and reel: G-TL- 1000 pc., R-TL- 750 pc. R-package is available in tape and reel only. **6**. For example, in a 55 W output design, the DPA426R will dissipate a worst case total of 2.5 W. **7**. See data sheet for power capability at 16 VDC and 24 VDC input. **8**. Power based on forward converter configuration with diode rectification assuming worst case $R_{DS(ON)}$ @ T_J=100 °C. Up to 5% higher output power possible using synchronous rectification.

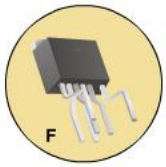

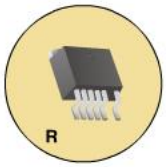

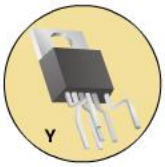

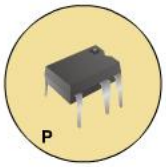

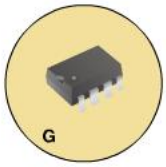

Features and Benefits

ALL PRODUCTS

- **Lower System Cost**
  - Features eliminate or reduce cost of external components
  - Reduced EMI filter cost
  - Reduced board, layout, and assembly cost
  - Reduced packaging and inventory cost
  - Higher production yields
- **Higher System Reliability**
  - Built-in system level fault protection
  - Fewer discrete components
- **Tight Tolerances for High Performance and Reliability**
- **Saves Design Time for Quicker Time-to-Market**
- **Broad Product Offering–Power Scalability Without Major Redesign**
- **EcoSmart® Energy Efficiency Reduces "No-load" and Standby Energy Waste**
  - Enables conformance with government guidelines (e.g. Energy Star, U.S. 1 Watt Standby Presidential Executive Order, European Commission "Code of Conduct")
  - Reduces user energy cost

DC-DC CONVERSION PRODUCTS

- **Extremely Simple Solution**
  - Simplifies complex designs
  - Fully integrates all primary functions
  - Dramatically reduces external parts count and board size
- **Targeted at Distributed Power Architectures (16 VDC to 75 VDC Input)**

AC-DC CONVERSION PRODUCTS

- **Smaller Size and Lighter Weight**
- **Universal Input Operation (85 VAC to 265 VAC)**
- **Lowest Cost Solution**

EcoSmart®

Cost Savings

TinySwitch®-II vs. Discrete Design*

2.5 W, UNIVERSAL INPUT POWER SUPPLY

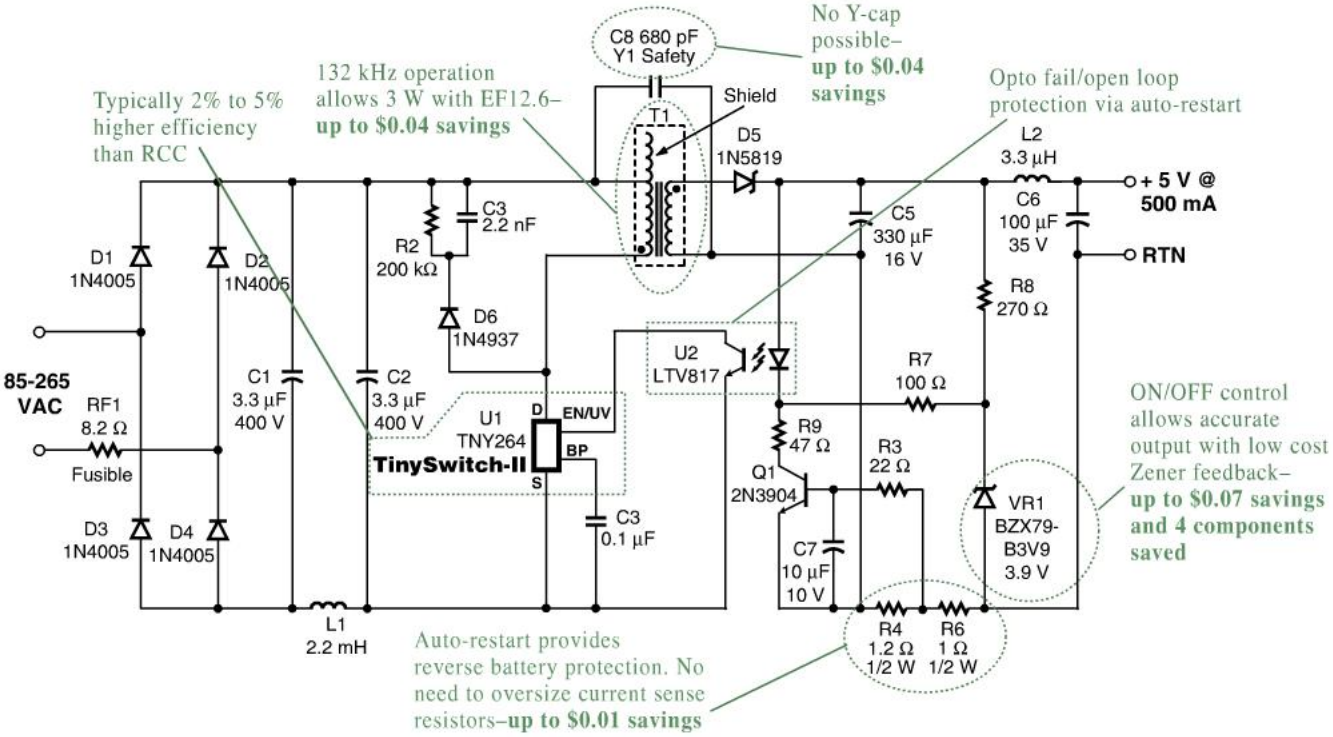

TOPSwitch®-GX vs. Discrete Design*

30 W, UNIVERSAL INPUT POWER SUPPLY

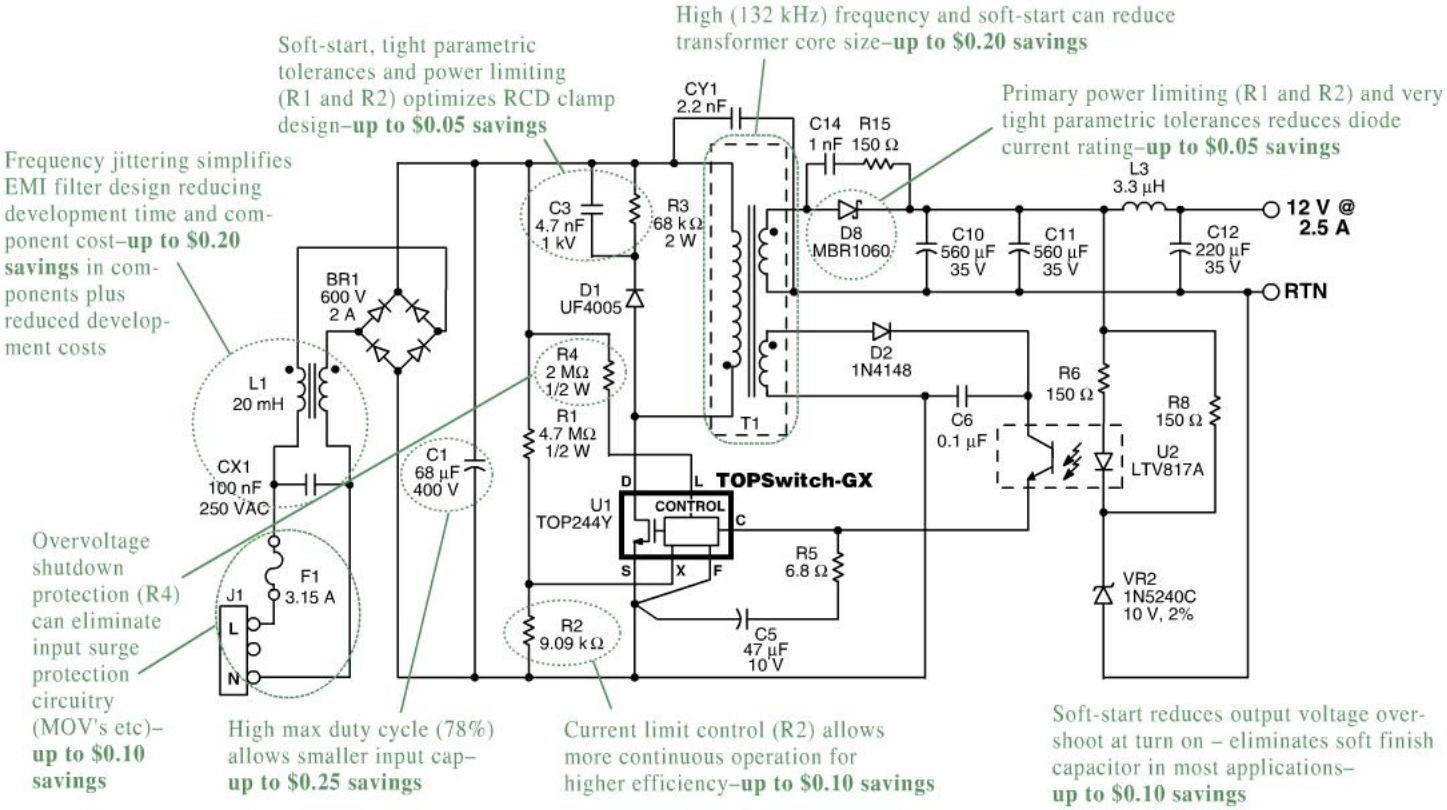

*Cost savings based on high volume quantities (>1 M/yr.). Higher savings possible at lower volumes.

Cost Savings

DPA-Switch™ vs. Discrete Design*

36-72 VDC INPUT, 5 V @ 6 A OUTPUT DC-DC CONVERTER POWER SUPPLY

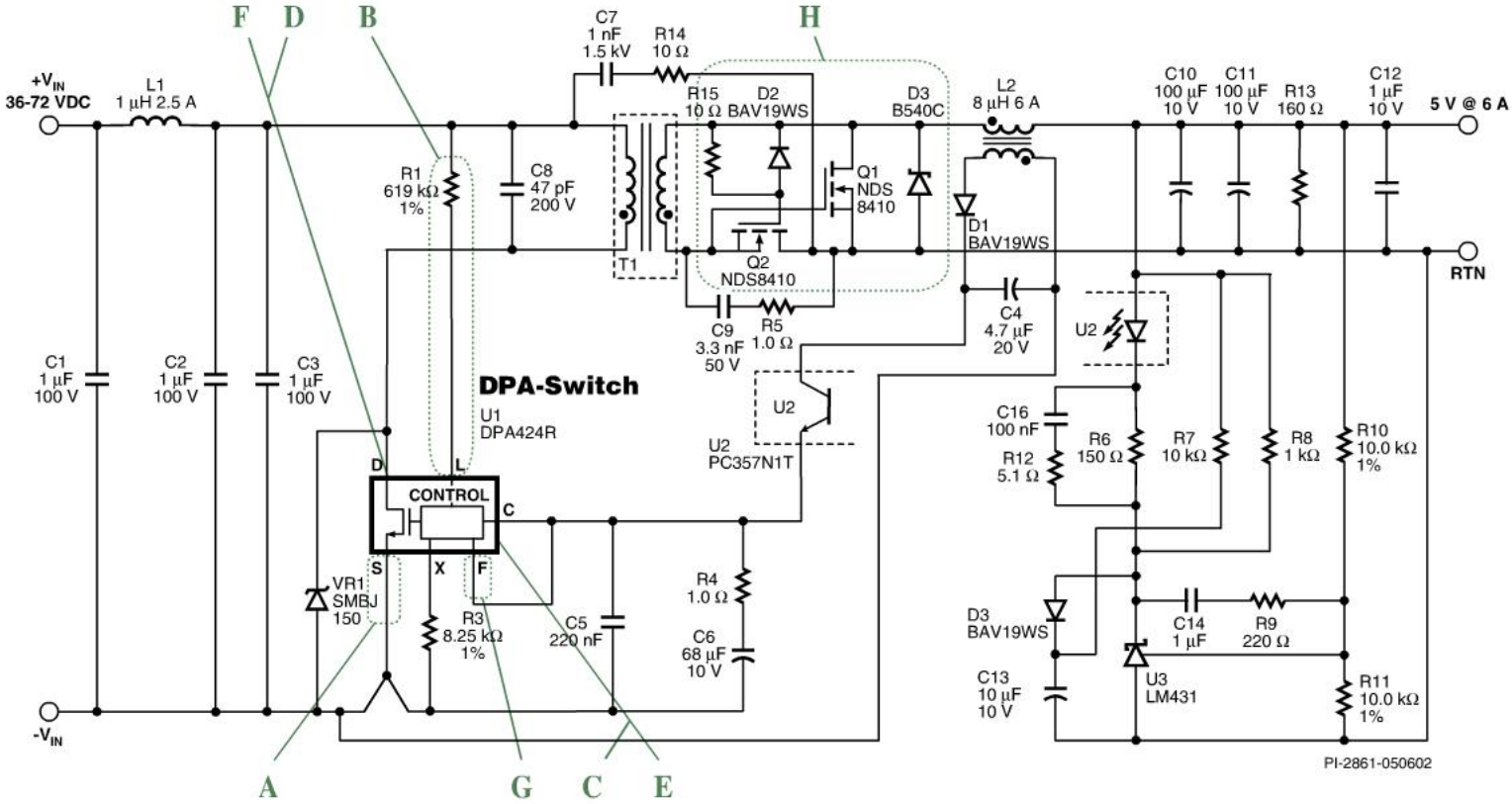

A) Source Connected Tab

- Heat sink connected to source reduces EMI (electrically "quiet")
- Reduces EMI filter costs
- **Up to $0.20 Savings**

B) Integrated Line Sense

- Accurate temperature stability
- Provide UV/OV
- Saves up to10 components
- **Up to $0.20 Savings**

C) Integrated Thermal Shutdown

- Directly senses power MOSFET temperature
- Hysteretic auto-restarting
- Wide hysteresis prevents high average temperatures
- Saves up to 4 components
- **Up to $0.15 Savings**

D) Integrated Start-up

- Higher efficiency (no "boostrap" losses)
- Saves up to 4 components
- **Up to $0.02 Savings**

E) Integrated Voltage Mode Controller

- >50% duty cycle operation without requiring slope compensation
- Saves up to 10 components
- **Up to $0.15 Savings**

F) Integrated Current Sense

- Tight tolerance and temperature compensated
- No current sense resistor (higher efficiency)
- No current sense transformer even for high power designs
- Programmable using X pin resistor
- Saves up to 6 components
- **Up to $0.25 Savings**

G) Accurate Integrated Oscillator

- No external components
- Tight tolerance and temperature stable
- Selectable 300/400 kHz operation
- Saves up to 5 components
- **Up to $0.05 Savings**

H) Simple Synchronous Rectification

- *DPA-Switch* line UV/OV shutdown limits gate drive voltage range from transformer winding
- **Up to $0.05 Savings**

*Cost savings based on high volume quantities (>1 M/yr.). Higher savings possible at lower volumes.

www.powerint.com

Switcher Benefits at Linear Cost

14 Components Total! Production Worthy Circuit.

2.75 W, UNIVERSAL INPUT POWER SUPPLY

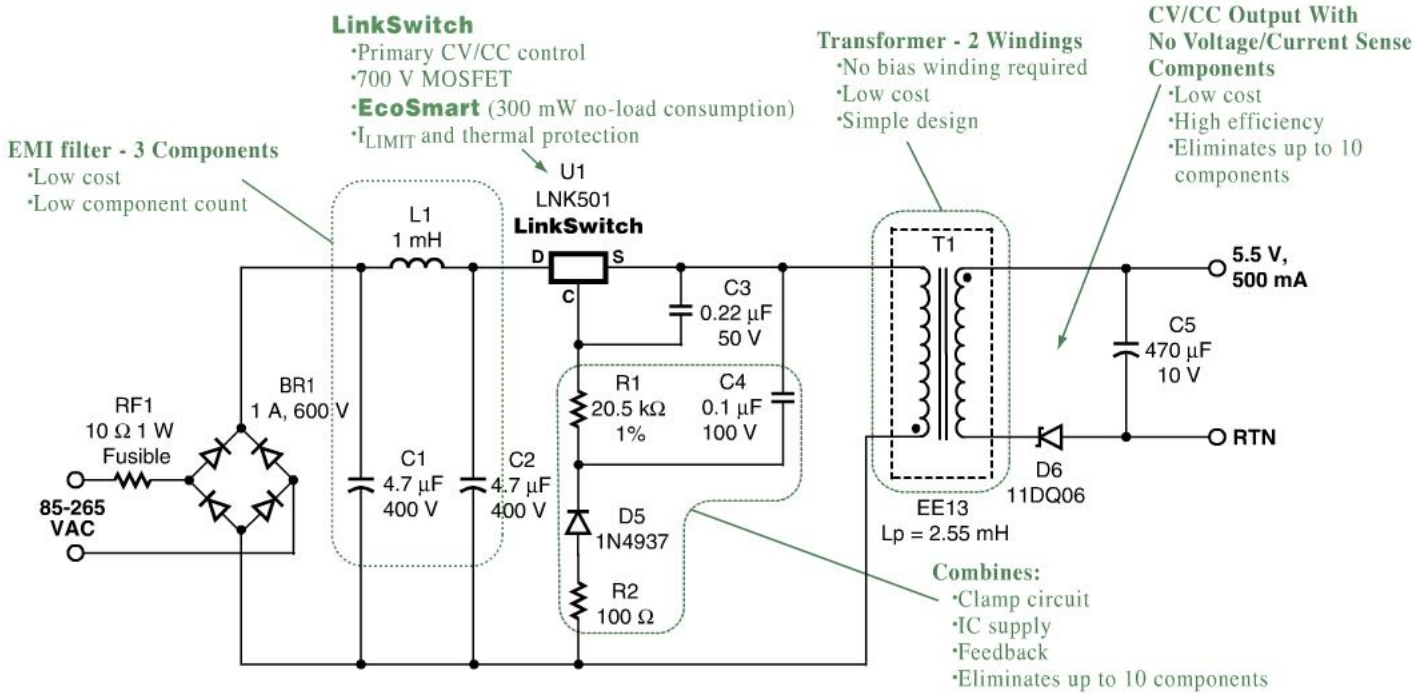

Total component cost <$0.65 at >1 million units per month (excluding cable, connectors and enclosure).

Design Tools

- **PI Expert™** A powerful software program that takes a designer's switching power supply requirements and determines the critical components needed to generate a working switch mode power supply. Auto design or manual control options. Design can be optimized for efficiency or cost.
- **Design Accelerator Kits** DAKs provide all the essential materials needed to demonstrate the advanced features of Power Integrations' ICs. Kits include a fully assembled and tested prototype power supply board, engineering report, product samples, unpopulated PCB, data sheet, and other related documentation.

Product Family	Power Supply Prototype Specifications	Order No.
TinySwitch and *TinySwitch-II*	12 V @ 1.2 W and 12 V/5 V @ 5 W (Home Appliance Supplies)	DAK-7
TOPSwitch-GX	19 V @ 70 W AC-DC Adapter	DAK-11
TinySwitch-II and *TOPSwitch-GX*	3.3 V @ 12 A, 5 V @ 15 A, 12 V @ 3 A, Forward Converter (145 W Continuous/160 Peak AC-DC Power Supply)	DAK-12
TOPSwitch-GX	3.3 V, 5 V, 12 V, 18 V, 30 V; 43 W Total (Multi-Output AC-DC Power Supply)	DAK-13
TinySwitch-II	9 V @ 3 W AC-DC Power Supply	DAK-14
LinkSwitch	5.5 V @ 2.75 W AC-DC Adapter	DAK-16
TOPSwitch-GX	3.3 V, 5 V, 30 V @ 10 W AC-DC Power Supply (Broadband Modem)	DAK-18
DPA-Switch	36 VDC to 75 VDC Input, 5 V @ 30 W Output, DC-DC Converter	DAK-21

- **2001/2002 Data Book and Design Guide**
- **EcoSmart Enabled Energy Efficient Solutions Brochure**
- **Application Notes**
- **Design Ideas**

Power Integrations, Inc. • 5245 Hellyer Avenue • San Jose, CA 95138 USA • Customer Service: +1 (408) 414-9665
For your nearest Power Integrations sales office, visit our Web site at www.powerint.com