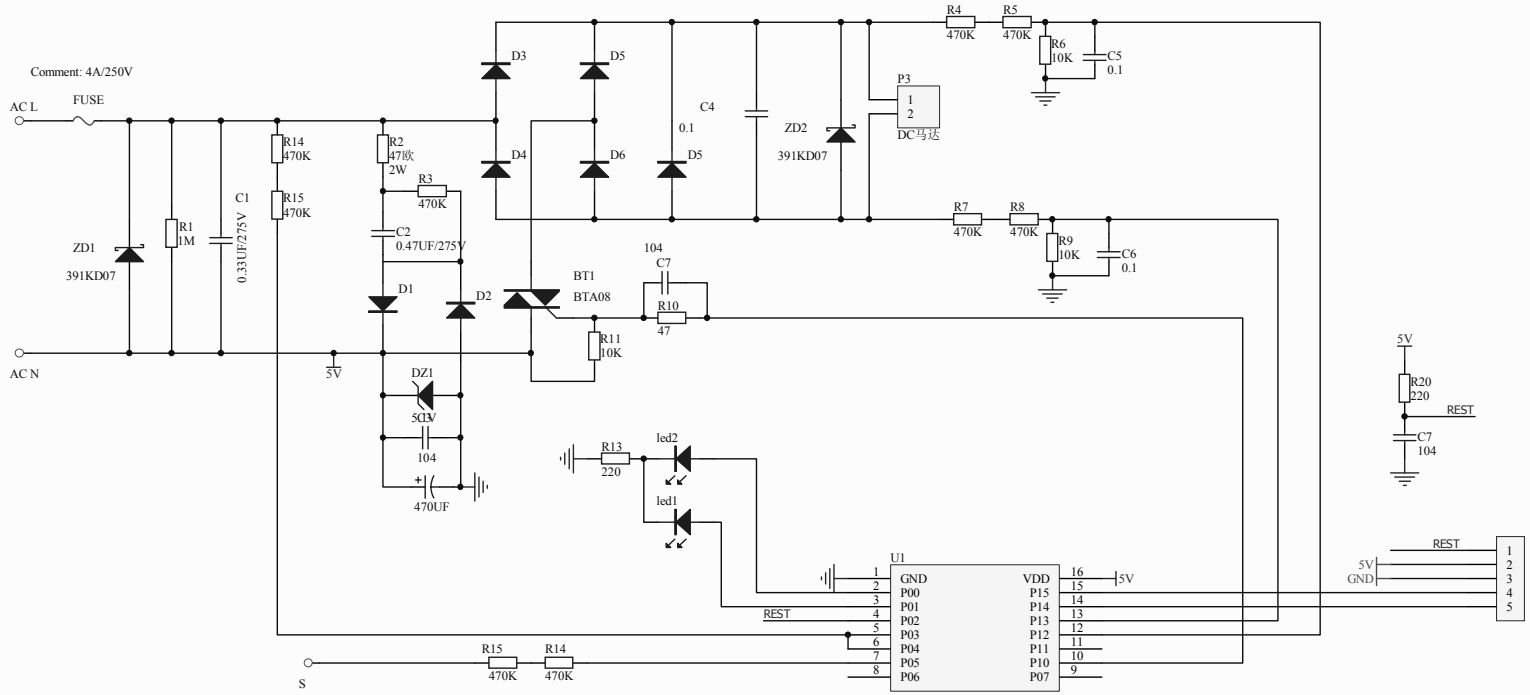


| Title | | |
|---|---|---|
| Size A3 | Number | Revision |
| Date: 2014-5-9 | | Sheet of |
| File: C:\Documents and Settings\..\电机.Sch | | Drawn By: |