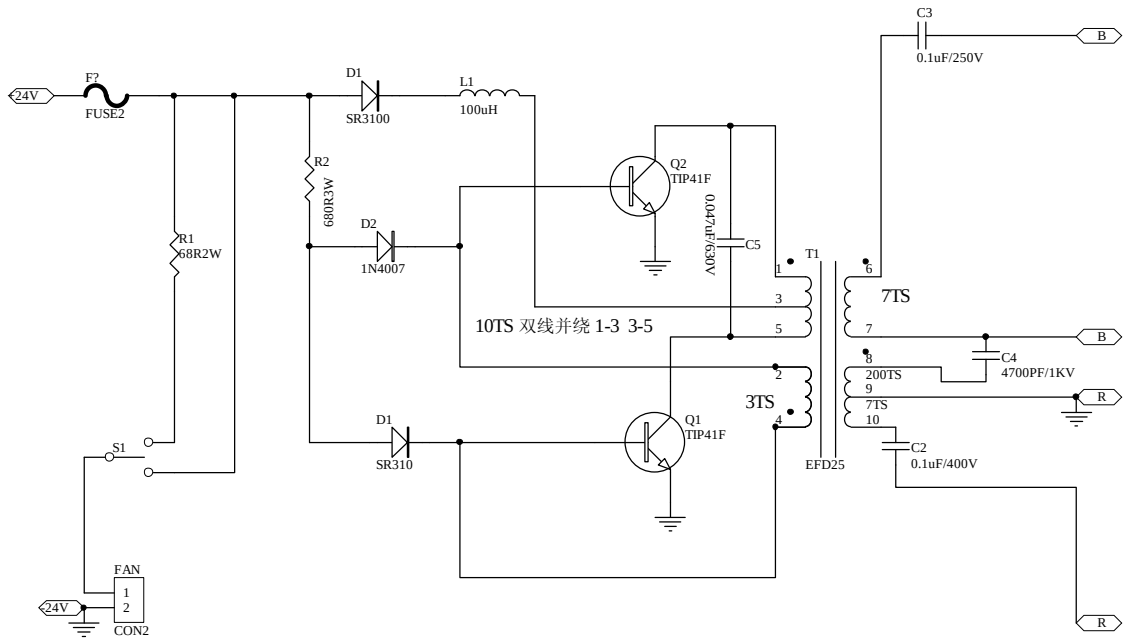


PA-08T1281-24 Input DC24V 0.4A GPH128T5

工作电压15.3V 工作电流379mA F0 25.1Khz

| | |
|---|---|
| Title | PA-08T1281-24 |
| Companyt Name | Fortek Industrial Co.,Ltd |
| Drawn By | Kale |
| APProved By | Tony CHAN |
| Version | V-00 |
| Date | 2014/04/17 |

PDF 文件使用 "pdfFactory Pro" 试用版本创建 www.fineprint.cn