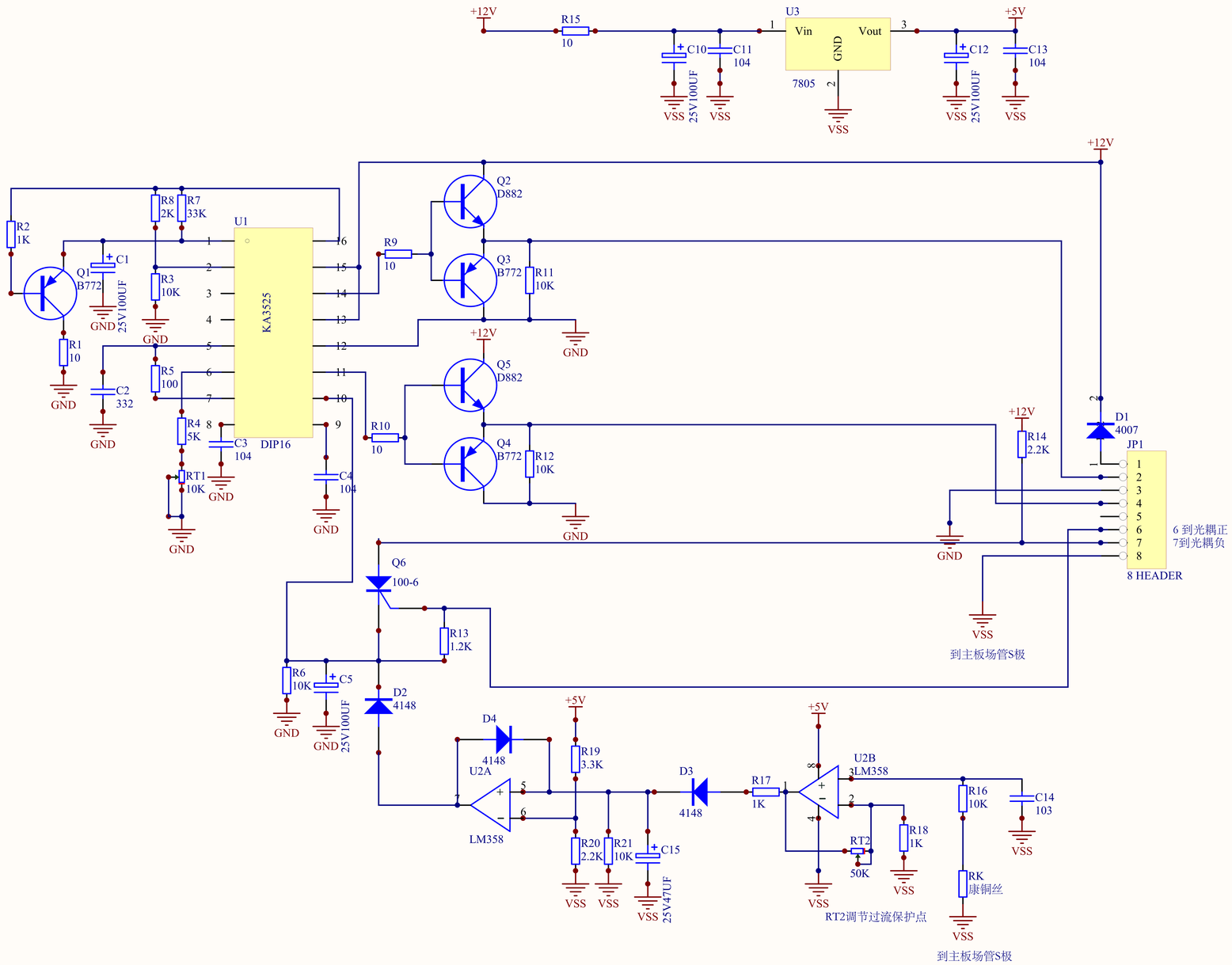

Title		
Size A3	Number	Revision
Date: 2014-4-14		Sheet of
File: G:\AD10 \..\KA3525+LM358.SchDoc		Drawn By: