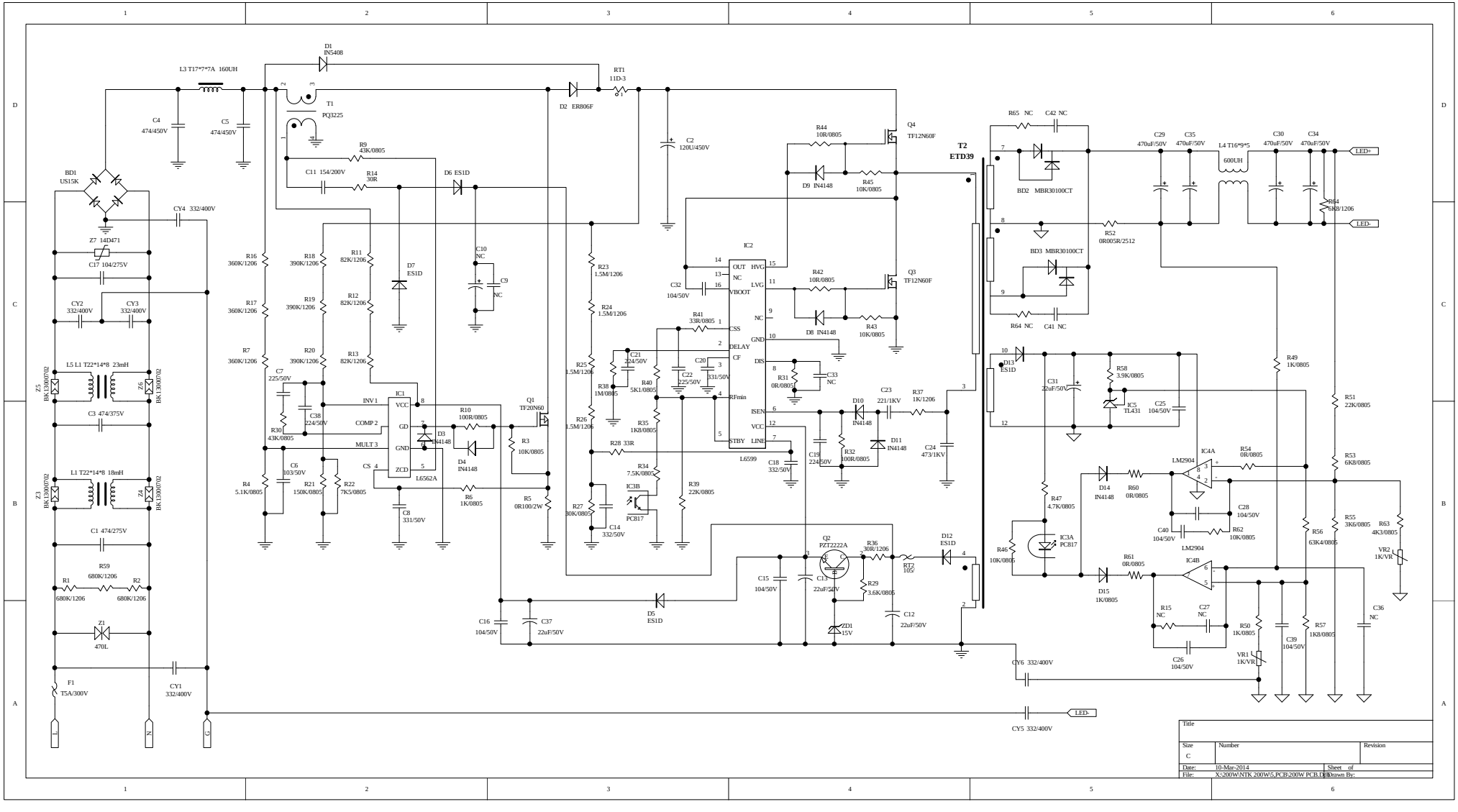
D1 IN5408
L3 T17*7*7A 160UH
T1 PQ3225
D2 ER806F
RT1 11D-3
C4 474/450V
C5 474/450V
R9 43K/0805
C11 154/200V
R14 30R
D6 ES1D
C2 120U/450V
BD1 US15K
CY4 332/400V
Z7 14D471
C17 104/275V
CY2 332/400V
CY3 332/400V
L5 L1 T22*14*8 23mH
Z5 BK1300/702
Z6 BK1300/702
C3 474/375V
L1 T22*14*8 18mH
Z1 BK1300/702
Z4 BK1300/702
C1 474/275V
R59 680K/1206
R1 680K/1206
R2 680K/1206
Z1 470L
F1 T5A/300V
CY1 332/400V
L
N
G
R16 360K/1206
R17 360K/1206
R7 360K/1206
R18 390K/1206
R19 390K/1206
R20 390K/1206
R11 82K/1206
R12 82K/1206
R13 82K/1206
D7 ES1D
C10 NC
C9 NC
C7 225/50V
C38 224/50V
R30 43K/0805
C6 103/50V
R4 5.1K/0805
R21 150K/0805
R22 7K5/0805
IC1 L6562A
INV 1
COMP 2
MULT 3
CS 4
VCC 8
GD 7
GND 6
ZCD 5
D3 IN4148
D4 IN4148
R10 100R/0805
R6 1K/0805
C8 331/50V
Q1 TF20N60
R3 10K/0805
R5 0R100/2W
R23 1.5M/1206
R24 1.5M/1206
R25 1.5M/1206
R26 1.5M/1206
R38 1M/0805
R27 30K/0805
C14 332/50V
C21 224/50V
R40 5K1/0805
R35 1K8/0805
R28 33R
R34 7.5K/0805
IC3B PC817
R39 22K/0805
C20 331/50V
C22 225/50V
R41 33R/0805
C32 104/50V
IC2 L6599
OUT 14
NC 13
VBOOT 16
CSS 1
DELAY 2
CF 3
RFmin 4
STBY 5
LINE 7
VCC 12
ISEN 6
DIS 8
GND 10
NC 9
LVG 11
HVG 15
C18 332/50V
C19 224/50V
R31 0R/0805
C33 NC
R32 100R/0805
D10 IN4148
D11 IN4148
C23 221/1KV
R37 1K/1206
C24 473/1KV
R44 10R/0805
D9 IN4148
R45 10K/0805
Q4 TF12N60F
R42 10R/0805
D8 IN4148
R43 10K/0805
Q3 TF12N60F
Q2 PZT2222A
R36 30R/1206
R29 3.6K/0805
C13 22uF/50V
ZD1 15V
C12 22uF/50V
RT2 105/
D12 ES1D
C15 104/50V
C16 104/50V
C37 22uF/50V
D5 ES1D
T2 ETD39
R65 NC
C42 NC
BD2 MBR30100CT
BD3 MBR30100CT
R52 0R005R/2512
R64 NC
C41 NC
C29 470uF/50V
C35 470uF/50V
L4 T16*9*5 600UH
C30 470uF/50V
C34 470uF/50V
LED+
LED-
R64 5K6/1206
D13 ES1D
C31 22uF/50V
R58 3.9K/0805
IC5 TL431
C25 104/50V
R49 1K/0805
R51 22K/0805
R53 6K8/0805
IC4A LM2904
R54 0R/0805
D14 IN4148
R60 0R/0805
C28 104/50V
C40 104/50V
R62 10K/0805
LM2904
R47 4.7K/0805
IC3A PC817
R46 10K/0805
R61 0R/0805
IC4B
D15 1K/0805
R15 NC
C27 NC
C26 104/50V
R50 1K/0805
VR1 1K/VR
C39 104/50V
R56 63K4/0805
R55 3K6/0805
R63 4K3/0805
VR2 1K/VR
R57 1K8/0805
C36 NC
CY6 332/400V
CY5 332/400V
LED-
Title
Size C
Number
Revision
Date: 10-Mar-2014
Sheet of
File: X:\200W\NTK 200W\5,PCB\200W PCB.Dd
Drawn By: